ElectriDistro

ED-MT-LVA-EN
Rev. 02 · October 2026
English edition

Technical manual

LVA Busway

Compact sandwich-type system with aluminum conductors

250–5,000A
Rated current

690V
Operating voltage

IP66
Max. degree of protection

IEC 61439-6
Design standard

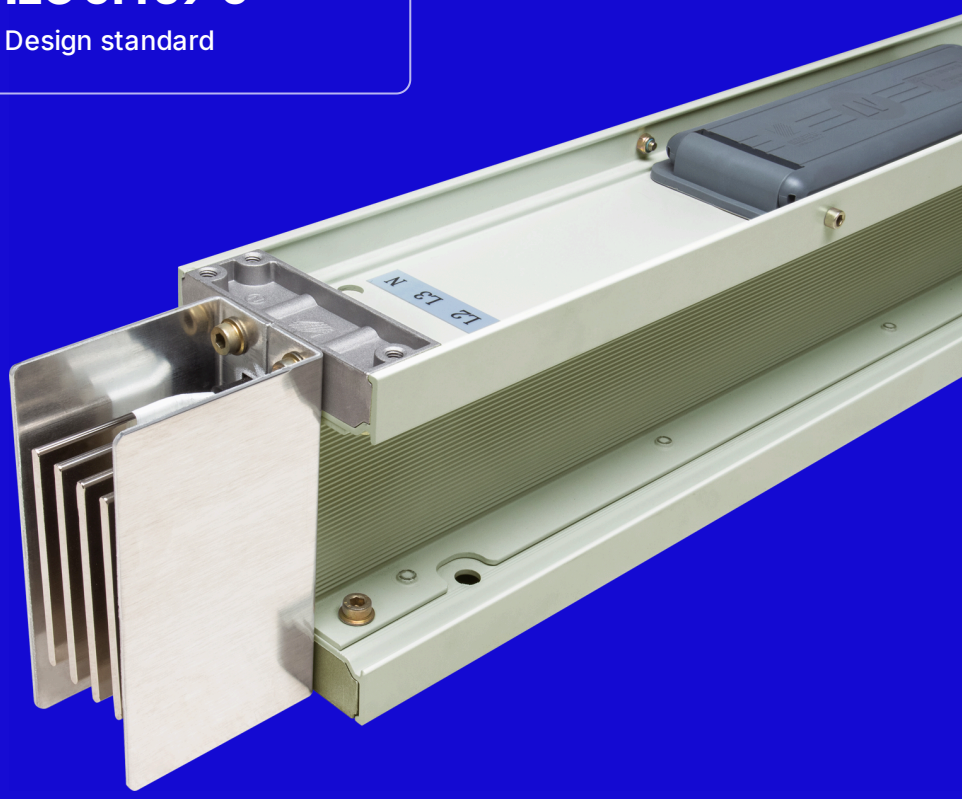

Manufactured by **Wetown Electric Group** · Distributed in the Americas by **ElectriDistro**
Authorized distribution channels: **BYB Electric Ecuador** · **Colombia** · **Peru**

WETOWN

Contents

Contents

1	Manufacturer	02
1.1	About this manual	02
1.2	Wetown Electric Group	03
1.3	Manufacturer credentials	04
2	LVA busway system	05
2.1	LVA busway applications	05
2.2	Components and names	06
3	Design features	07
4	Technical data	10
4.1	Dimensions, weight, fault ratings	10
4.2	Impedance and voltage drop, 60Hz	11
4.3	Impedance and voltage drop, 50Hz	12
4.4	Cross-section and protective conductor	13
5	Components	14
5.1	Straight sections	14
5.3	BENDs, TEEs and combination BEND	15
5.6	Connection to switchboard or transformer	18
5.9	In-line accessories	21
5.10	Tap-off boxes and feed boxes	22
6	Installation	24
6.1	Horizontal mounting	24
6.4	Minimum clearances and wall penetrations	26
6.6	Vertical mounting	27
6.9	IP degree of protection	29
7	Ordering codes	30
8	Quote your project	32

1.1 About this manual

Scope

Wetown LV aluminum busway (LVA).
Ratings from 250A to 5,000A.
Technical values from the manufacturer.

Conventions

Decimal point and comma thousands separator.
For example: 0.097 or 1,600.
Units are shown in each table header.

The manufacturer may update data due to technical or production improvements.
Confirm all values with ElectriDistro when ordering.

1.2 · Manufacturer

Wetown Electric Group

The busway manufacturer with the largest production plant in Asia.
30+ years designing, testing and manufacturing busway in China.

Wetown Electric Group headquarters · China

136,000m²	700,000m	30+	40+
industrial complex 84,000m² under roof	of busway per year stated capacity	years manufacturing busway	countries with installed projects

1.2.1 Manufacturing capacity

Plants	4 manufacturing bases and 10+ subsidiaries in China and abroad
Stated capacity	Busway **700,000m** · copper bar **10,000t** · aluminum profile **4,000t**
Research	Three research and development centers in China
In-house laboratory	40+ tests · recognized by CNAS, DEKRA (formerly KEMA), ASTA and TÜV
Manufacturing	Automated assembly lines · high-speed saw cutting · silver-plated contacts
Technical alliances	GE (2007) · ABB (2016) · Westinghouse (2017)
Listed company	Shanghai Stock Exchange, STAR Market · code 688226

1.2.2 Global presence

1.3 · Manufacturer

Manufacturer credentials

1.3.1 Technical alliances with global brands

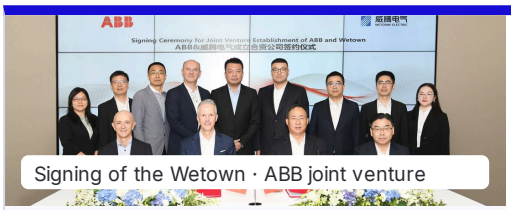

Signing of the Wetown · ABB joint venture

Since 2007 | Since 2016 | Since 2017

- Wetown works with **GE, ABB and Westinghouse** as technical allies.
- With ABB, it formed a joint venture: **Jiangsu Wetown ABB Busway**.
- That shared know-how backs every Wetown busway.

Extensive technical know-how, without the overhead of a global brand.
That's the ElectriDistro competitive edge.

1.3.2 Certifications

Management systems	ISO 9001 Quality	ISO 14001 Environmental	OHSAS 18001 Health and safety	SA 8000 Social responsibility			
Product certification	UL United States	CE European Union	CCC China	CIDET Colombia	EAC Eurasian Union	GOST-R Russia	RoHS Restricted substances
Test laboratories	DEKRA Netherlands · formerly KEMA	ASTA United Kingdom					

1.3.3 Manufacturer reference projects

Marina Bay Sands Hotel
Singapore · hotel

Casino Tower
Macau · casino and hotel

National Stadium
Beijing · stadium

Asian Games Stadium
Stadium

Shenzhen Baohe Hospital
Shenzhen · hospital

Wanda Plaza
Shopping mall

Panzhihua Steel (Group)
Steel industry

Gezhouba Group
Hydropower

1.3.4 Authorized distribution chain

WETOWN
Manufacturer
Wetown Electric Group
Design, testing and manufacturing

→

ElectriDistro
Exclusive distributor
ElectriDistro
Represents Wetown in the Americas

→

Authorized distribution channels
BYB Electric
- BYB Electric Ecuador
- BYB Electric Colombia
- BYB Electric Peru

Sales, technical support and warranty.

2 · System

LVA busway system

Compact power distribution system with sandwich-type construction.
High electrical efficiency, low voltage drop and high mechanical strength.

250–5,000A
rated current
aluminum

690V
operating voltage
insulation: 1,000V

up to IP66
degree of protection
depending on
application

50 / 60Hz
frequency
rated

Configurations
3-phase, 3-wire
3-phase, 4-wire
3-phase, 5-wire

Insulation
Mylar polyester (standard)
Epoxy resin (optional)
Halogen-free

Housing
Two-piece
Extruded aluminum
No hysteresis losses

2.1 LVA busway applications

Where LVA busway is installed.

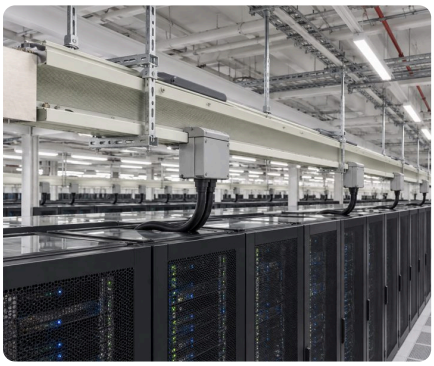
Data centers

Commercial buildings

Industrial

Semiconductors

Energy and renewables

Rail transit

Illustrative images

2 · System

Components and names

2.2 Components of a typical installation

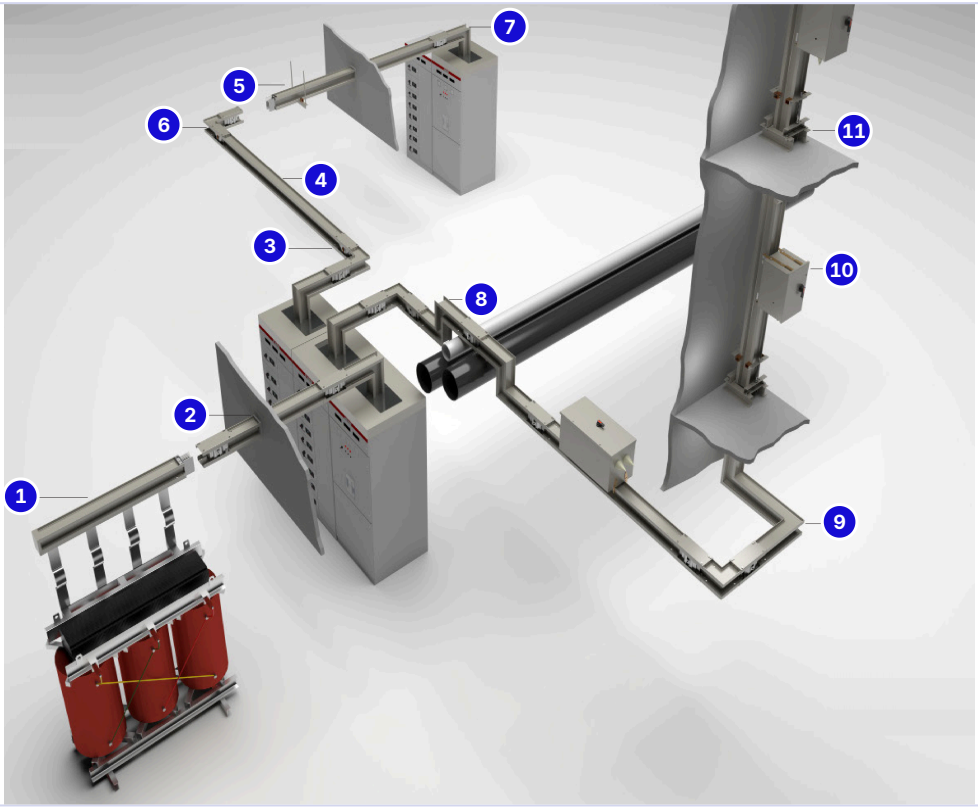

Figure 2.1 · Manufacturer render. Numbers match the table.

	ElectriDistro name	Also called
1	**Transformer connection**	Transformer throat, transformer flange end
2	**Fire barrier**	Wall penetration, firestop, wall flange
3	**Joint**	Joint pack, section joint
4	**Straight section**	Feeder busway section
5	**Hanger**	Trapeze hanger, support
6	**Flatwise BEND**	Horizontal elbow*, flat elbow
7	**Edgewise BEND**	Vertical elbow*, edge elbow
8	**Z combination**	Offset, double BEND, Z-offset
9	**Special BEND**	Custom BEND, non-standard elbow
10	**Tap-off box**	Plug-in unit, bus plug
11	**Vertical spring hanger**	Spring hanger, riser spring support

* With the busway mounted flat.

3 · Design features

Design and performance

How LVA busway is built and what each detail delivers.

3.1 Two-piece ribbed housing

- Ribbed extruded aluminum: better heat dissipation.
- Two-piece design: more reliable IP rating on site.
- Available ratings: IP54, IP65 or IP66.

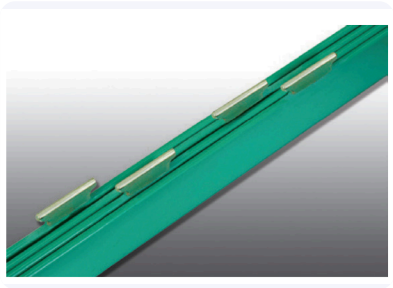

3.2 Welded conductors

- True sandwich construction.
- In plug-in sections, the bars are welded in place.
- Silver-plated, unbent tabs: lower temperature.
- No chimney effect.

3.3 Sandwich construction

- Compact conductors inside the housing.
- Ampacity does not depend on the mounting method.
- Only 125mm wide: takes up less space.

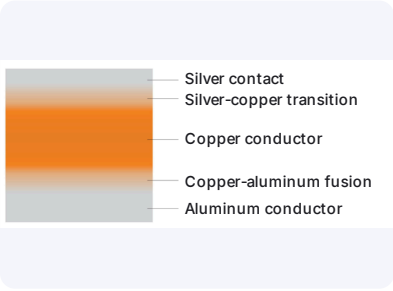

3.4 Particle bonding technology (PBT)

- Silver-to-silver nanoparticle bond at joints and tap-offs.
- Lower contact resistance and higher reliability.
- Transition alloy between aluminum, copper and silver.

3 · Design features

Insulation, manufacturing and joints

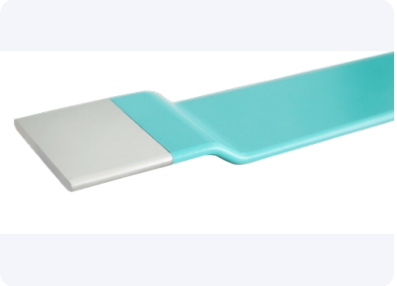

3.5 Insulation

- Standard: polyester film (Mylar), class B.
- Optional: epoxy resin, class H (IEC 60085:2007).
- Halogen-free: no toxic emissions in a fire.

3.6 Compact design

- 250A busway from 125 × 103mm.
- 100A tap-off box from 360 × 250 × 250mm.

3.7 High-precision conductor cutting

- High-speed saw: clean cut, no conductor deformation.
- Flat, uniform ends: lower joint temperature.

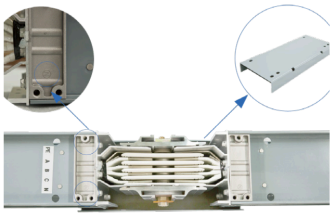

3.8 Bridge-type joint with mis-mating guard

- Prevents joining sections with the wrong phase sequence.
- Each joint allows ±8mm of linear adjustment.

3 · Design features

Joints, tap-offs and monitoring

3.9 Single-bolt joint

- 50% less connection time than a traditional design.
- Double-head break-off torque bolt.
- Tightened with a 16mm socket wrench.
- Belleville washers: uniform pressure across the joint.

3.10 Plug-in outlets

- Fully silver-plated outlets and box stabs.
- Tap-off box with full safety interlock.
- Outlet module with silicone seal, up to IP54.
- Up to 10 outlets per 3m section.

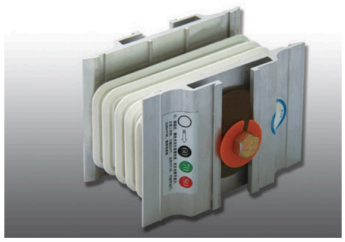

3.11 Joint temperature indicator

- Concave-convex insulator edge: longer creepage distance.
- Color indicator: early warning of high temperature.

3.12 Smart monitoring (optional)

- Temperature monitored from the tap-off box.
- Over-temperature alarm.
- Smart joint, smart box and data concentrator.
- SCADA integration: remote metering, control and alerts.

4 · Technical data · aluminum conductors

Dimensions, weight, fault ratings

Physical data by rated current, to select the section and size the supports.
For impedance and voltage drop, see Table 4.2.

Table 4.1 Physical data and short-circuit withstand ratings

Aluminum · IEC 61439-6

Rated current A	Bar stacks quantity	Width mm	Height mm	Weight, 4 conductors 3 phases + neutral · kg/m	Weight, 5 conductors 3 phases + neutral + ground · kg/m	Short-time withstand current (Icw), 1s kA	Peak withstand current (Ipk) kA
250A	1	125	103	6.8	7.2	15	30
400A	1	125	113	7.5	7.9	15	30
630A	1	125	128	8.8	9.3	30	63
800A	1	125	143	9.8	10.4	30	63
1,000A	1	125	168	11.8	12.7	50	105
1,250A	1	125	203	14.6	15.7	50	105
1,350A	1	125	203	14.6	15.7	50	105
1,600A	1	125	253	18.3	19.8	65	143
2,000A S	1	125	293	19.7	21.5	80	176
2,000A D	2	125	322	22.6	24.3	80	176
2,500A	2	125	392	28.7	31.0	80	176
3,200A	2	125	492	36.2	39.4	120	264
4,000A	2	125	572	44.7	48.9	120	264
5,000A	2	125	685	50.1	53.4	120	264

S / D: the 2,000A rating is built with one bar stack (S) or two stacks (D).

Weight, 4 conductors: 3 phases + 100% neutral.

Weight, 5 conductors: 3 phases + 100% neutral + 50% protective (ground) conductor.

Icw (short-time withstand current): current withstood for 1s without damage (IEC 61439 test).

Ipk (peak withstand current): maximum short-circuit peak value withstood.

Ipk = n × Icw per IEC 61439-1: n = 2.0 up to 20kA, 2.1 up to 50kA and 2.2 above 50kA.

How to use this table

1. Select the row by rated current.
2. Check that Icw is at least the available fault current at the installation point.
3. Check that Ipk is at least the expected peak current.
4. Use the height to plan space in the tray or shaft.
5. Use the weight per meter to calculate support loads (see section 6).

4 · Technical data · aluminum conductors

Impedance and voltage drop

Values per meter of run, to calculate voltage drop and short circuit in 60Hz systems.

Table 4.2 Impedance and voltage drop

Aluminum · 60Hz · 20°C

Rated current A	Resistance at 20°C R_{20} · mΩ/m	Resistance at full load mΩ/m	Reactance X · mΩ/m	Impedance at 20°C Z_{20} · mΩ/m	Voltage drop at full load (V/m) by power factor (cos φ)				
					0.6	0.7	0.8	0.9	1.0
250A	0.142	0.188	0.034	0.171	0.050	0.055	0.059	**0.063**	0.063
400A	0.114	0.150	0.031	0.152	0.066	0.072	0.077	**0.082**	0.080
630A	0.088	0.115	0.029	0.131	0.086	0.094	0.100	**0.105**	0.101
800A	0.072	0.061	0.025	0.108	0.092	0.099	0.106	**0.111**	0.106
1,000A	0.055	0.046	0.022	0.086	0.090	0.097	0.103	**0.107**	0.101
1,250A	0.041	0.034	0.018	0.062	0.088	0.094	0.099	**0.102**	0.094
1,350A	0.041	0.034	0.018	0.062	0.088	0.094	0.099	**0.102**	0.094
1,600A	0.030	0.025	0.014	0.049	0.085	0.091	0.095	**0.097**	0.089
2,000A S	0.027	0.023	0.013	0.045	0.097	0.103	0.108	**0.110**	0.100
2,000A D	0.027	0.023	0.013	0.045	0.097	0.103	0.108	**0.110**	0.100
2,500A	0.020	0.017	0.010	0.031	0.090	0.096	0.100	**0.103**	0.094
3,200A	0.015	0.013	0.008	0.024	0.080	0.086	0.091	**0.094**	0.089
4,000A	0.012	0.010	0.004	0.015	0.073	0.079	0.085	**0.090**	0.088
5,000A	0.01	0.014	0.005	0.015	0.09	0.104	0.108	**0.111**	0.102

Conditions: aluminum conductor · 60Hz · reference temperature 20°C · rated load.

Load distribution factor: k = 1. On each project, k varies with the number of tap-offs.

The 0.9 power factor column is highlighted only as a reading aid; it is not a recommended value.

Calculation example

1,600A · 50m · power factor 0.9 → 0.097V/m × 50m = **4.85V** at full load (≈ 1.0% at 480V).
Calculate each project with its actual load and k factor.

4 · Technical data · aluminum conductors

Impedance and voltage drop

Values per meter of run, to calculate voltage drop and short circuit in 50Hz systems.
For 60Hz, see Table 4.2.

Table 4.3 Impedance and voltage drop

Aluminum · 50Hz · 20°C

Rated current A	Resistance at 20°C R_{20} · mΩ/m	Resistance at full load mΩ/m	Reactance X · mΩ/m	Impedance at 20°C Z_{20} · mΩ/m	Voltage drop at full load (V/m) by power factor (cos φ)				
					0.6	0.7	0.8	0.9	1.0
250A	0.142	0.188	0.028	0.171	0.048	0.053	0.058	**0.062**	0.063
400A	0.114	0.150	0.026	0.152	0.063	0.069	0.075	**0.080**	0.080
630A	0.088	0.115	0.024	0.131	0.082	0.090	0.097	**0.103**	0.101
800A	0.072	0.061	0.021	0.108	0.087	0.095	0.102	**0.108**	0.106
1,000A	0.055	0.046	0.018	0.086	0.085	0.093	0.099	**0.104**	0.101
1,250A	0.041	0.034	0.015	0.062	0.082	0.089	0.095	**0.099**	0.094
1,350A	0.041	0.034	0.015	0.062	0.082	0.089	0.095	**0.099**	0.094
1,600A	0.030	0.025	0.012	0.049	0.080	0.086	0.091	**0.094**	0.089
2,000A S	0.027	0.023	0.011	0.045	0.091	0.098	0.103	**0.107**	0.100
2,000A D	0.027	0.023	0.011	0.045	0.091	0.098	0.103	**0.107**	0.100
2,500A	0.020	0.017	0.008	0.031	0.084	0.091	0.096	**0.100**	0.094
3,200A	0.015	0.013	0.007	0.024	0.081	0.086	0.090	**0.092**	0.083
4,000A	0.012	0.010	0.003	0.015	0.069	0.076	0.083	**0.088**	0.088
5,000A	0.01	0.014	0.003	0.015	0.085	0.095	0.105	**0.109**	0.103

Conditions: aluminum conductor · 50Hz · reference temperature 20°C · rated load.

Load distribution factor: k = 1. On each project, k varies with the number of tap-offs.

The 0.9 power factor column is highlighted only as a reading aid; it is not a recommended value.

4 · Technical data · aluminum conductors

Cross-section and protective conductor

Constant 125mm width; height H increases with rated current (see Table 4.1).
The aluminum housing provides a very low-impedance ground path.

Figure 4.1 Single stack — 250A to 2,000A (S)

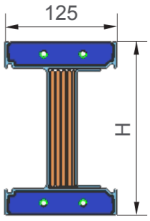

Figure 4.2 Double stack — 2,000A (D) to 5,000A

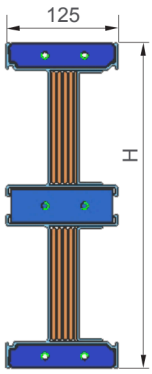

Table 4.4 Protective conductor (ground)

Aluminum · 20°C

Rated current A	Bar stacks	Ground conductor cross-section (mm²)		DC resistance (µΩ/m)	
		Internal ground bar, 50%	Integral housing	Internal ground bar, 50%	Integral housing
250A	1	120	1,563	291.7	22.88
400A	1	150	1,623	233.3	22.01
630A	1	195	1,713	179.5	20.83
800A	1	240	1,803	147.7	19.84
1,000A	1	315	1,953	112.2	18.29
1,250A	1	420	2,163	83.9	16.48
1,350A	1	420	2,163	83.9	16.48
1,600A	1	570	2,463	61.7	14.44
2,000A S	1	690	2,730	58.4	12.36
2,000A D	2	630	3,662	56.1	9.59
2,500A	2	840	4,082	42.0	8.60
3,200A	2	1,140	4,682	30.9	7.50
4,000A	2	1,380	5,162	25.5	6.80
5,000A	2	1,710	5,822	22.3	6.20

> **Internal ground bar**: internal protective conductor sized at 50% of the phase.
> **Integral housing**: the aluminum housing used as the protective conductor.
> Plug-in outlets bond ground through tinned copper tabs bolted to the box housing.

5.1–5.2 · Components

Straight sections

Standard section lengths of 3m or 4m.
Installed horizontally or vertically.

5.1 Feeder busway section (no outlets)

Use

Carries power from switchboards
and transformers to loads.
Standard length: 3,000mm or 4,000mm.
Minimum length: 460mm.

5.2 Plug-in busway section

Optional outlets on both sides of the section.
Up to 5 outlets per side on a standard 3m section.
Outlets can be reserved for future expansion.

Figure 5.1 Outlet positions — Distances from the section end

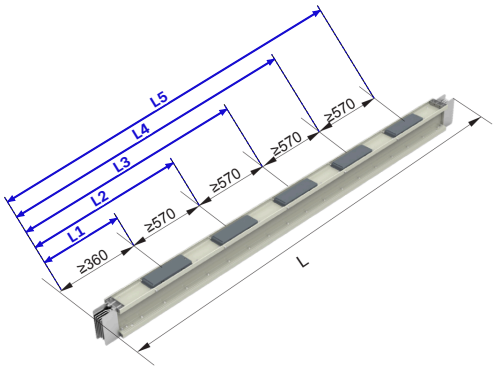

Outlet	Distance (mm)
L1	360
L2	930
L3	1,500
L4	2,070
L5	2,640

L1: from the section end to the center of the first outlet, minimum 360mm.
Each following outlet adds 570mm: L2 = L1 + 570, L3 = L2 + 570, and so on up to L5.

Plug-in section length

Standard: 1m, 2m or 3m.
Made to order: any length from 0.72m to 4m.
Minimum: 720mm, i.e. one outlet with 360mm on each side.

Base plate and cover at each outlet

Base plate: prevents accidental contact with live parts (IP2X).
Base plate: identifies the phase sequence.
Cover: protects the contact surface from dust and moisture.

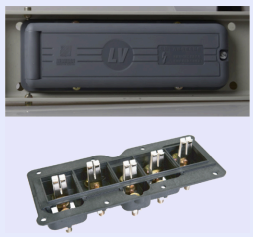

5.3 · Components

BENDs (elbows)

BENDs are also called elbows. They change the direction of the run.
Dimensions X and Y are measured from the bus centerline to the joint centerline.

Figure 5.2 Flatwise BEND — horizontal elbow*

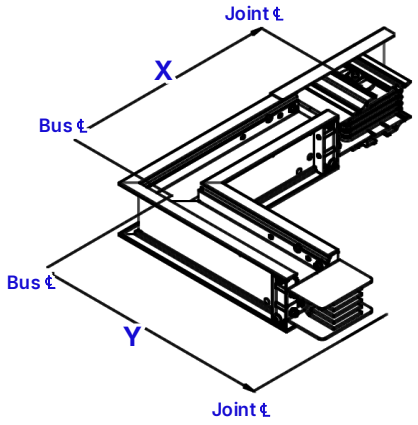

Figure 5.3 Edgewise BEND — vertical elbow*

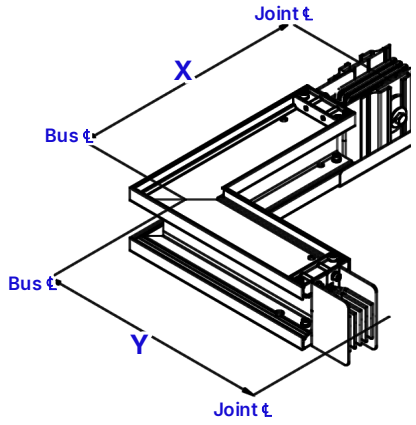

Joint ℄: measuring point at the end of the fitting. **Bus ℄**: centerline of the run entering the fitting.
* With the busway mounted flat.

Table 5.1 BEND dimensions

Aluminum

Rated current (A)	Flatwise BEND				Edgewise BEND			
	Minimum		Standard		Minimum		Standard	
	X (mm)	Y (mm)	X (mm)	Y (mm)	X (mm)	Y (mm)	X (mm)	Y (mm)
250A	341	341	450	450	363	363	400	400
400A	351	351	450	450	363	363	400	400
630A	366	366	450	450	363	363	400	400
800A	381	381	450	450	363	363	400	400
1,000A	406	406	450	450	363	363	400	400
1,250A	441	441	500	500	363	363	400	400
1,350A	441	441	500	500	363	363	400	400
1,600A	491	491	500	500	363	363	400	400
2,000A S	530	530	600	600	363	363	400	400
2,000A D	560	560	850	850	363	363	400	400
2,500A	630	630	850	850	363	363	400	400
3,200A	730	730	850	850	363	363	400	400
4,000A	810	810	850	850	363	363	400	400
5,000A	950	950	1,000	1,000	363	363	400	400

> **Minimum**: shortest dimension that can be manufactured. **Standard**: catalog dimension.
> For special dimensions, contact ElectriDistro.

5.4 · Components

TEEs

Split the run into two branches.
X: branch leg. Y and Z: main run, on each side of the branch.

Figure 5.4 Flatwise TEE — Table 5.2

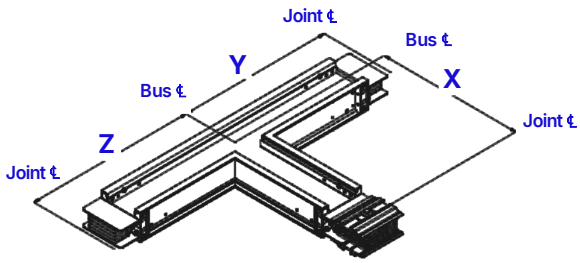

Figure 5.5 Edgewise TEE — Table 5.2

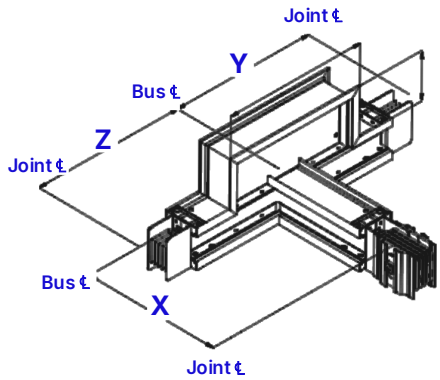

Joint ℄: measuring point at the end of the fitting. **Bus ℄**: centerline of the run entering the fitting.

Table 5.2 TEE dimensions

Aluminum

Rated current (A)	Flatwise TEE						Edgewise TEE					
	Minimum			Standard			Minimum			Standard		
	X (mm)	Y (mm)	Z (mm)	X (mm)	Y (mm)	Z (mm)	X (mm)	Y (mm)	Z (mm)	X (mm)	Y (mm)	Z (mm)
250A	341	290	290	450	350	350	363	411	411	400	500	500
400A	351	295	295	450	350	350	363	411	411	400	500	500
630A	366	302	302	450	350	350	363	426	426	400	500	500
800A	381	310	310	450	350	350	363	436	436	400	500	500
1,000A	406	322	322	450	350	350	363	461	461	400	500	500
1,250A	441	340	340	500	400	400	363	496	496	400	600	600
1,350A	441	340	340	500	400	400	363	496	496	400	600	600
1,600A	491	365	365	500	400	400	363	531	531	400	600	600
2,000A S	530	400	400	850	550	550	363	571	571	400	600	600
2,000A D	560	399	399	850	550	550	363	581	581	400	600	600
2,500A	630	434	434	850	550	550	363	660	660	400	900	900
3,200A	730	484	484	850	550	550	363	740	740	400	900	900
4,000A	810	524	524	850	550	550	363	840	840	400	900	900
5,000A	950	950	950	1,000	1,000	1,000	363	950	950	400	1,000	1,000

> For special dimensions, contact ElectriDistro.

5.5 · Components

Combination BEND (double BEND or Z)

Two BENDs in one fitting: identical (two flatwise BENDs) or mixed.
Useful for clearing obstacles on tight runs.

Figure 5.6 Combination BEND — Example A

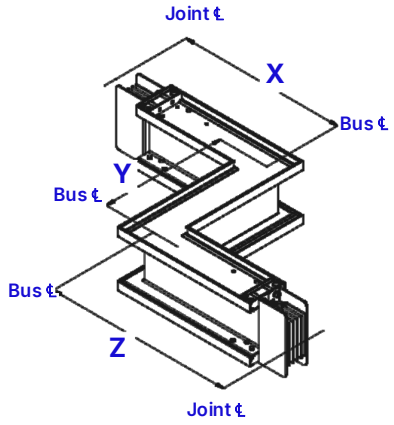

Figure 5.7 Combination BEND — Example B

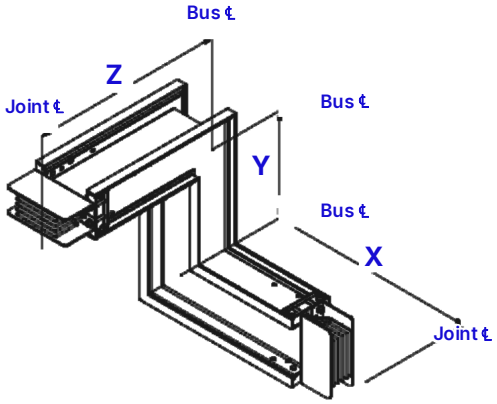

Joint ℄: measuring point at the end of the fitting. **Bus ℄**: centerline of the run entering the fitting.

Table 5.3 Combination BEND dimensions

Aluminum

Rated current (A)	Minimum X (mm)	Minimum Y (mm)	Minimum Z (mm)	Standard X (mm)	Standard Y (mm)	Standard Z (mm)
250A	341	348	363	450	450	400
400A	351	358	363	450	450	400
630A	366	373	363	450	450	400
800A	381	388	363	450	450	400
1,000A	406	413	363	450	450	400
1,250A	441	448	363	500	500	400
1,350A	441	448	363	500	500	400
1,600A	491	498	363	500	500	400
2,000A S	530	530	363	850	850	400
2,000A D	560	567	363	850	850	400
2,500A	630	637	363	850	850	400
3,200A	730	737	363	850	850	400
4,000A	810	817	363	850	850	400
5,000A	950	950	363	1,000	1,000	400

> For special dimensions, contact ElectriDistro.

5.6 · Components

Connection to switchboard or transformer

The flanged end connects the busway to any switchboard or transformer.
Bar spacing at the flanged end is adapted to each application.

5.6.1 Switchboard flanged end

0.56m
standard length

0.56–2.00m
special length

Figure 5.8 Section view — dimensions in mm

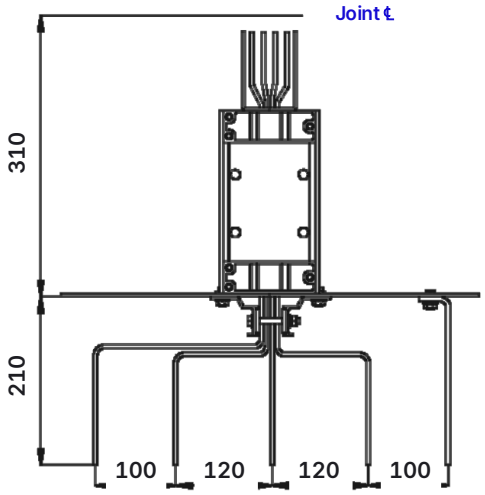

3 phases + 100% neutral
50% ground through integral housing

Figure 5.9 Isometric view — dimensions in mm

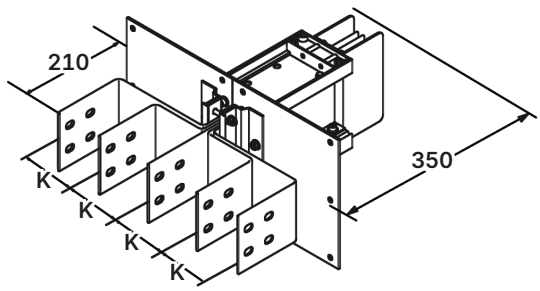

3 phases + 100% neutral
50% ground through internal bar

Figure 5.10 Switchboard connection — Top view · section views

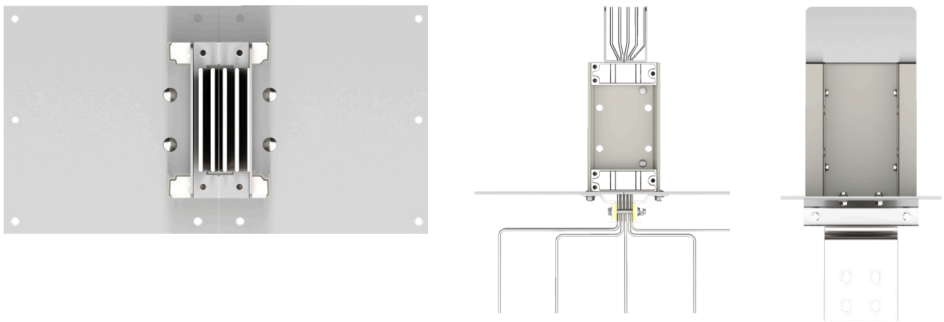

For special dimensions, contact ElectriDistro.

5.7 · Components

Switchboard panel cutout

Cutout and drilling of the switchboard panel where the flanged end mounts.

Figure 5.11 Pattern 01 — Single bar stack

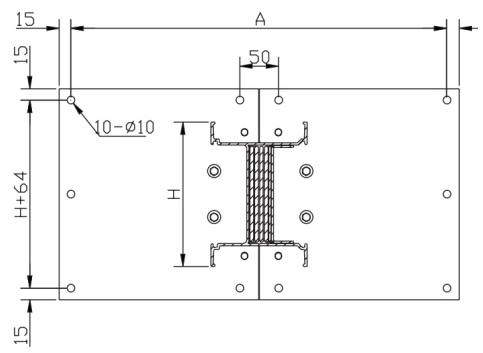

Figure 5.12 Pattern 02 — Double bar stack

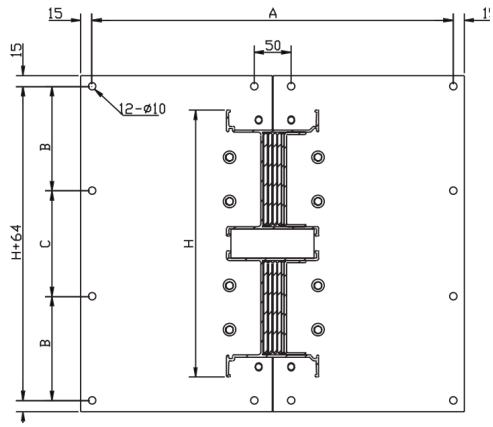

Table 5.4 Cutout and drilling dimensions

Aluminum

Rated current (A)	Height H (mm)	3 phases + neutral + ground			3 phases + neutral			Pattern
		A (mm)	B (mm)	C (mm)	A (mm)	B (mm)	C (mm)	
250A	103	490	—	—	370	—	—	01
400A	113	490	—	—	370	—	—	01
630A	128	490	—	—	370	—	—	01
800A	143	490	—	—	370	—	—	01
1,000A	168	490	—	—	370	—	—	01
1,250A	203	490	—	—	370	—	—	01
1,350A	203	490	—	—	370	—	—	01
1,600A	253	490	—	—	370	—	—	01
2,000A S	293	490	130	126	370	130	126	01
2,000A D	322	490	130	126	370	130	126	02
2,500A	392	490	150	156	370	150	156	02
3,200A	492	490	185	186	370	185	186	02
4,000A	572	490	210	216	370	210	216	02
5,000A	685	490	250	249	370	250	249	02

— : dimension does not apply to that pattern.

5.8 · Components

Flanged end bar drilling

Hole pattern on the flanged end bars, for connecting switchboard bus or lugs.

Figure 5.13 Flanged ends and hole patterns A, B, C and D — slotted hole Φ14×20mm

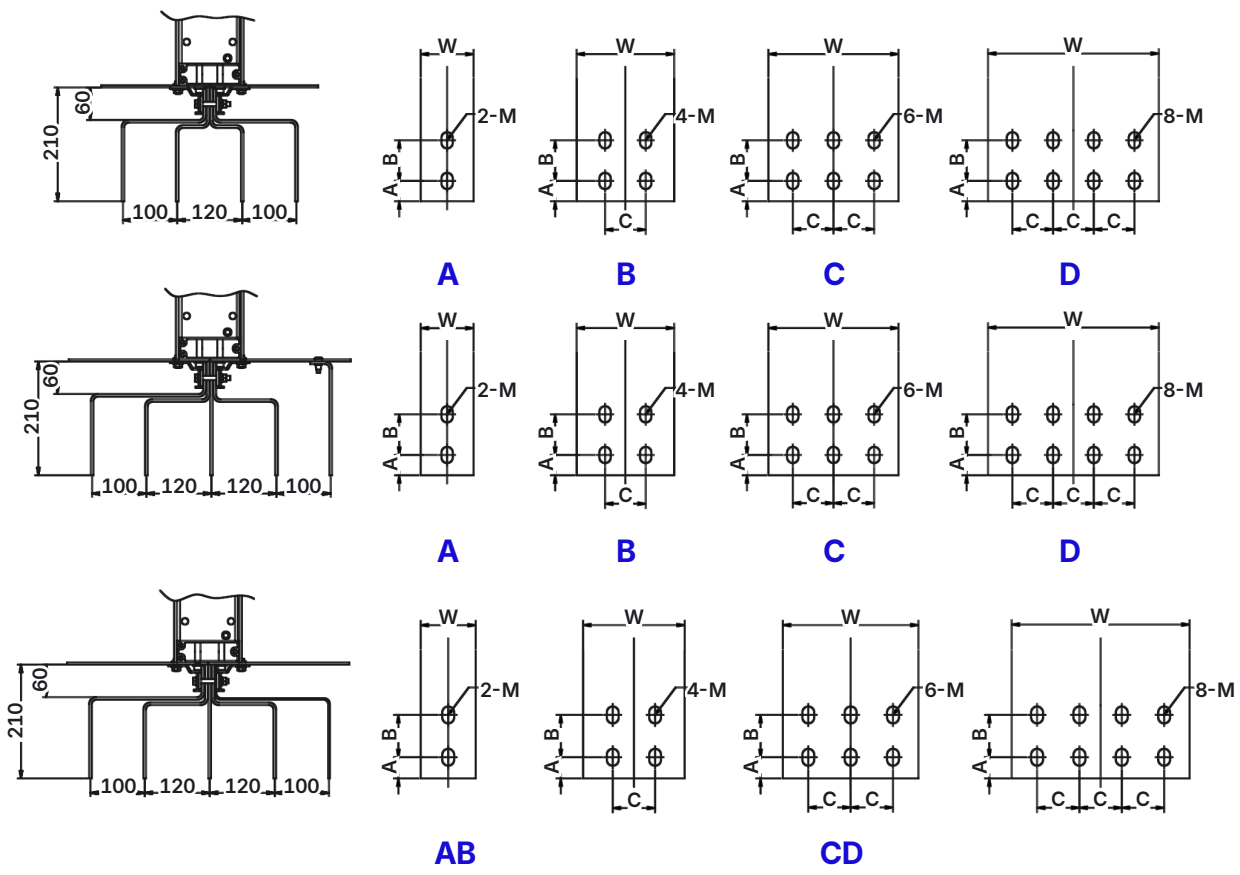

Table 5.5 Flanged end bar holes

Aluminum

Rated current (A)	A (mm)	B (mm)	C (mm)	Hole M (mm)	Pattern
250A – 800A	25	50	—	Φ14×20	A
1,000A	25	50	50	Φ14×20	B
1,250A – 1,600A	25	50	50	Φ14×20	C
2,000A S	25	50	50	Φ14×20	D
2,000A D	25	50	50	Φ14×20	B
2,500A – 3,200A	25	50	50	Φ14×20	C
4,000A – 5,000A	25	50	50	Φ14×20	D

Ratings with the same pattern share a row. — : dimension does not apply to that pattern.

5.9 · Components

In-line accessories

Special fittings installed within the run.

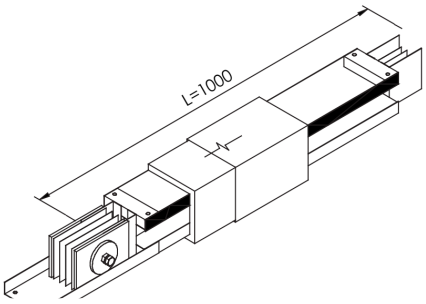

5.9.1 Expansion joint

- Transition section that absorbs thermal expansion.
- On runs over 60m, install one every 60m.

L = 1,000mm

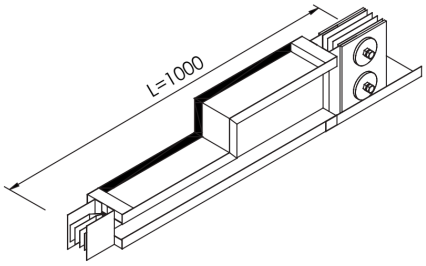

5.9.2 Reducer

- Reduces the bar size toward the final load.
- More economical power distribution.

L = 1,000mm

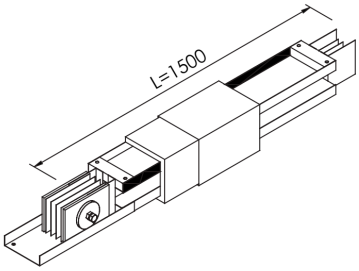

5.9.3 Phase transposition section

- Changes the phase sequence of the bars.
- Minimum length: 1,500mm.
- The sequence on each side is defined with the customer.

L = 1,500mm

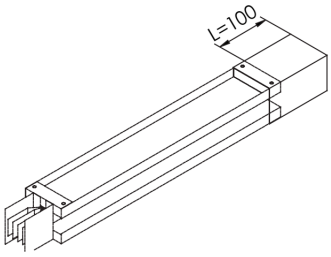

5.9.4 End closure

- Protects the far end of the busway.

L = 100mm

5.10 · Components

Tap-off boxes

Carry power from the busway to the load and protect each tap-off.
They are the component users operate most often.

Circuit breaker tap-off box

- Current: 16A to 400A (plug-in).
- 3- or 4-pole breaker.
- Breaker or fuse protection.

Optional accessories

- Operating handle.
- Shunt trip.
- Fire alarm contact.
- Ground-fault protection.

Figure 5.14 Tap-off box L × W × H

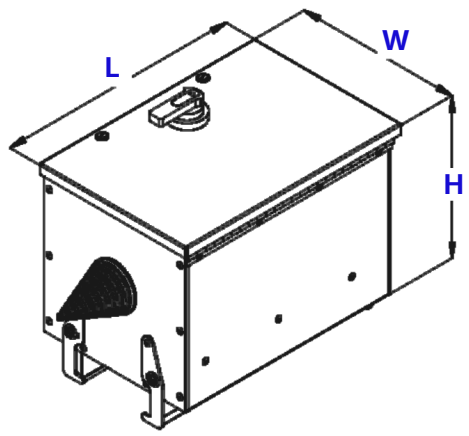

Table 5.6 Tap-off box dimensions

Aluminum busway

Box rating (A)	Length L (mm)	Width W (mm)	Height H (mm)	Busway connection
100A	360	250	250	Plug-in
160A	400	250	250	Plug-in
250A	520	270	270	Plug-in
400A	650	310	310	Plug-in
630A	950	440	360	Bolt-on
800A	1,050	440	360	Bolt-on

Plug-in: plugs into the section outlets. **Bolt-on**: tap-off bolted to the busway.
Minimum wall clearance to install the box: see Figure 6.5.

5.11 · Components

Feed box

Used when a busway run is fed by cable.

5.11.1 Feed box

- Standard size: 1m × 1m × 1m.
- Also made to order from a site survey.

Figure 5.15 Feed box

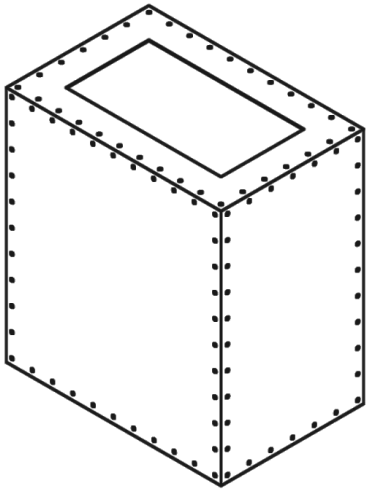

5.11.2 Flanged end with feed box

- The flanged end plate is made to fit the box size.
- This lets the flanged end bolt directly to the feed box.

Figure 5.16 Flanged end with feed box

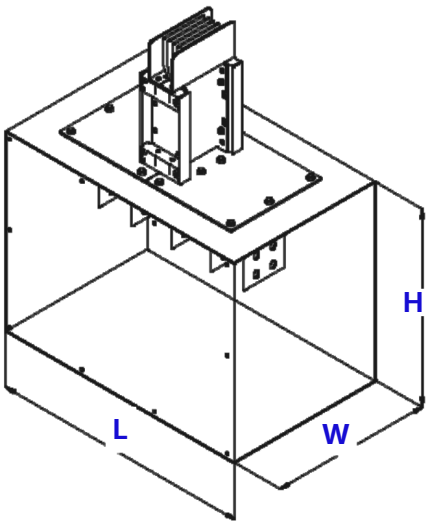

6 · Installation

Horizontal mounting

LVA busway mounts flatwise or edgewise.
It is installed on trapeze hangers or on fixed wall-bracket supports.

≤ 2m
maximum spacing between two adjacent supports

M10
hex bolts for fastening

2 positions
flatwise or edgewise, with the same hanger clamp

6.1 Trapeze hangers

Figure 6.1 Hanger · flatwise mounting — Busway resting on its wide face

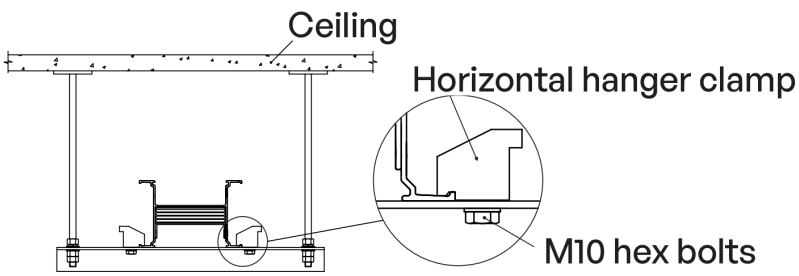

Figure 6.2 Hanger · edgewise mounting — Busway resting on its edge

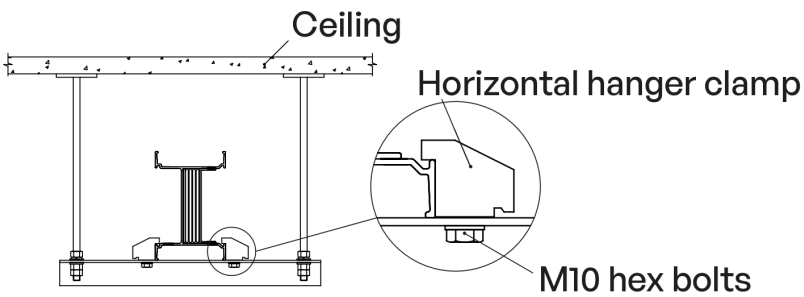

Procedure

1. Drill the slab and set steel expansion anchors to secure the supports.
   Alternative: cast a steel U-channel into the slab and weld the supports to it.
2. Install supports no more than 2m apart.
3. Fasten the busway to the crossbar with horizontal hanger clamps and M10 hex bolts.

> **Note:** on runs over 60m, install expansion joints every 60m.
> The joint absorbs the thermal expansion of the busway.

* State any special support requirements when ordering.

6.2 Fixed wall-bracket supports

Figure 6.3 Wall bracket · flatwise mounting — Busway resting on its wide face

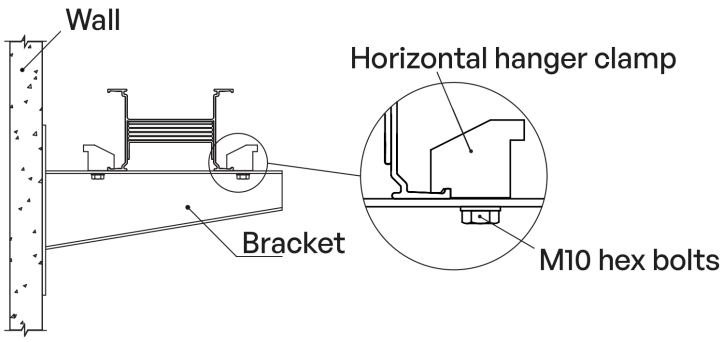

Figure 6.4 Wall bracket · edgewise mounting — Busway resting on its edge

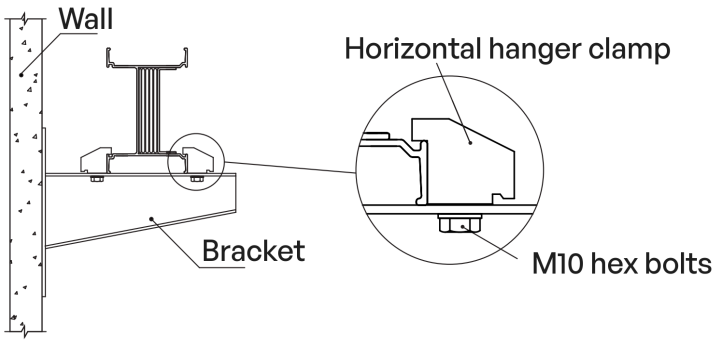

6.3 Minimum clearance L to install tap-off boxes

Figure 6.5 Clearance L for the tap-off box

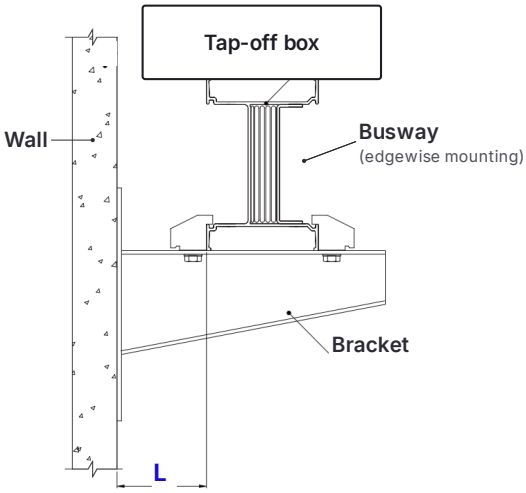

Box rating	L (mm)
100A	150
160A	175
250A	195
400A	210
630A	230
800A	260
1,000A	300

The box plugs in centered on the narrow side of the busway. L increases with the box rating.

6.4–6.5 · Installation

Minimum clearances and wall penetrations

Clearance around the busway and wall openings for horizontal runs.

6.4 Minimum installation clearances

Minimum clearance between the busway and the ceiling or wall.
Applies to flatwise and edgewise mounting.

Figure 6.6 Minimum clearances to ceiling and wall — dimensions in mm

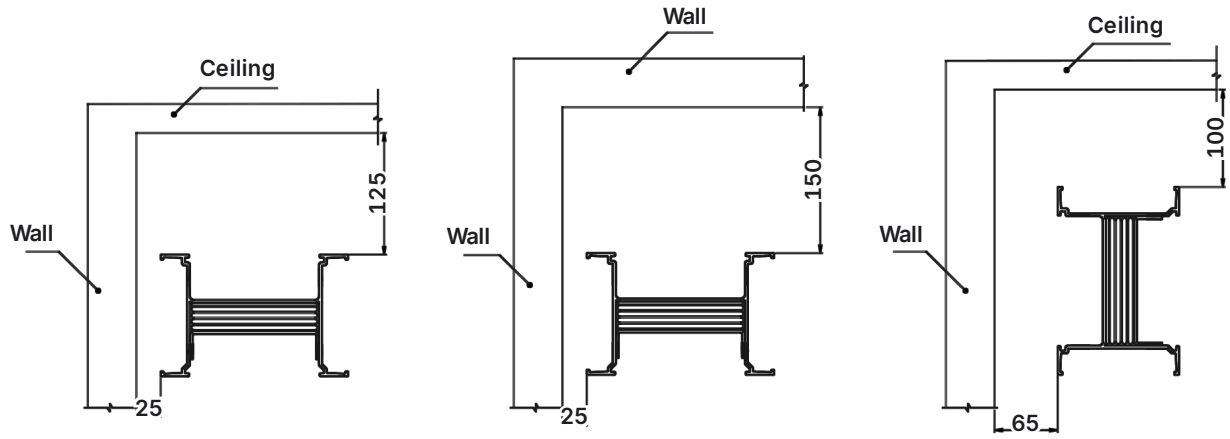

6.5 Horizontal wall penetration

Wall opening for a horizontal busway run.

Figure 6.7 Horizontal wall opening — dimensions in mm

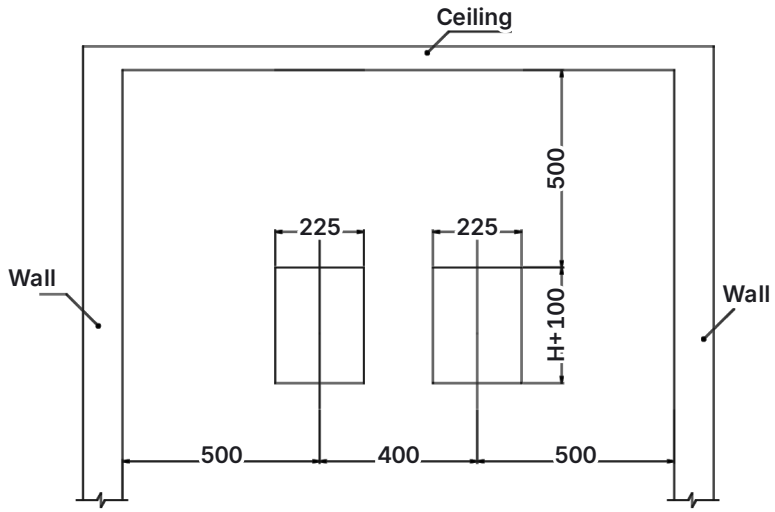

6.6–6.8 · Installation

Vertical mounting

Vertical risers between floors: slab openings and supports.
The steel base channel and its anchoring to the slab are supplied by the customer.

6.6 Slab openings

Use the figure to size the opening in each slab.

Figure 6.8 Vertical riser openings — dimensions in mm

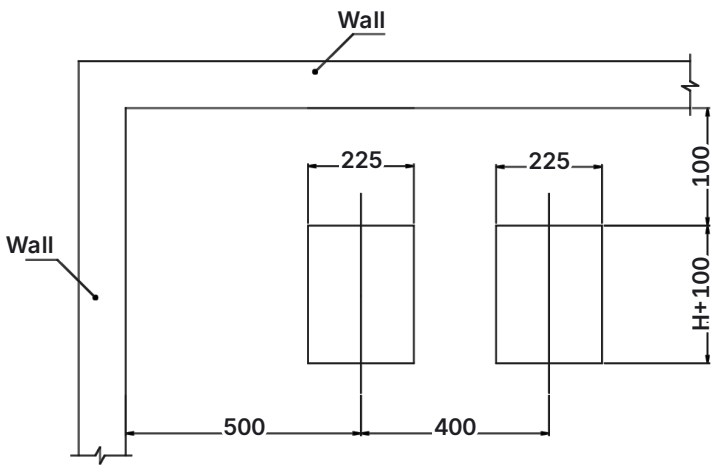

> **i** **Vertical risers:** leave at least 350mm between two risers in the same shaft.

6.7 Fixed vertical support

Figure 6.9 Plan view

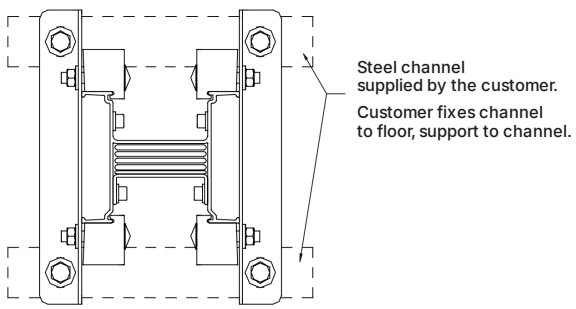

Figure 6.10 Installation diagram

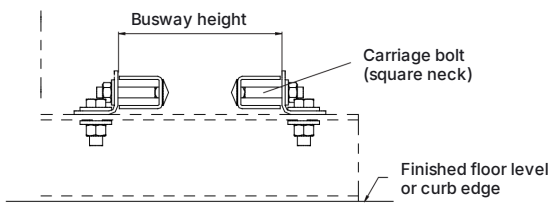

6.8 Vertical spring hanger

Figure 6.11 Isometric view

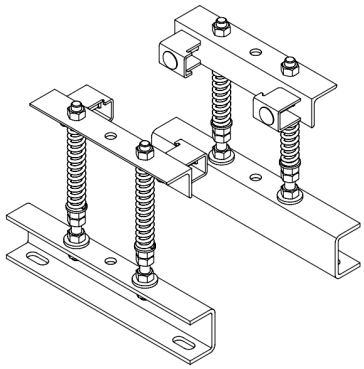

Figure 6.12 Plan view

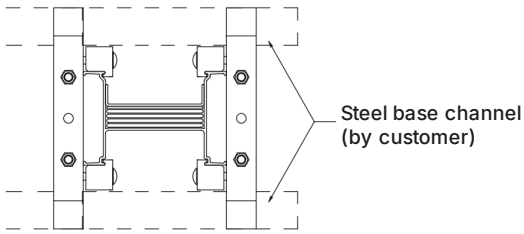

Figure 6.13 Installation diagram

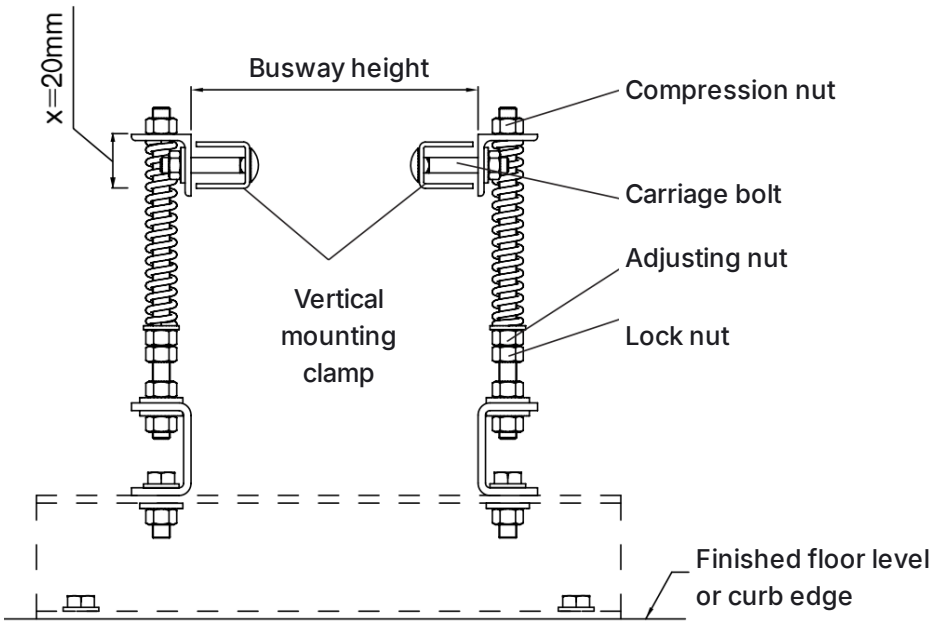

6.9 · Installation

IP degree of protection

LVA busway is rated up to IP66, depending on the application.
The IP code (IEC 60529) has two digits: solids and water.

Figure 6.14 How to read the IP rating — example: IP65

Rating	First digit: solids and dust		Second digit: water	
IP40	>1mm	Solid objects larger than 1mm.		No protection against water.
IP42	>1mm	Solid objects larger than 1mm.		Dripping water when tilted up to 15°.
IP54		Dust-protected.		Splashing water.
IP65		Dust-tight.		Water jets.
IP66		Dust-tight.		Powerful water jets.

7 · Ordering codes

LVA busway code

Each piece is identified by a six-field code.

LV	A	04	51	66	-	BRJ
Series	Aluminum	Current	Conductors	IP rating		Piece

Example · LVA 045166-BRJ

LV series · aluminum conductor · 400A.
4 conductors (L1 + L2 + L3 + N) with ground through the housing · IP66 · piece: reducer.

Rated current

Code	Aluminum
02	250A
04	400A
06	630A
08	800A
10	1,000A
12	1,250A
16	1,600A
20	2,000A
25	2,500A
32	3,200A
40	4,000A

Conductors

Code	Configuration
41	L1 + L2 + L3 + N
51	L1 + L2 + L3 + N · ground through housing
52	L1 + L2 + L3 + N + PE

Degree of protection

Code	Rating
42	IP42
54	IP54
65	IP65
66	IP66

Piece

Code	Description
—	Straight section
LH / LV	Vertical L BEND
LR / LL	Horizontal L BEND
ZV / ZH	Vertical Z BEND
ZR / ZL	Horizontal Z BEND
LVR / LHR / LVL / LHL	Vertical-horizontal BEND
LRV / LLV / LRH / LLH	Horizontal-vertical BEND
TR / TL	Horizontal TEE
TV / TH	Vertical TEE
FE	Straight section with flanged end
FELV / FELH	Vertical L BEND with flanged end
FELR / FELL	Horizontal L BEND with flanged end
BRJ	Reducer
PJZ	Expansion joint

For 1,350A, 2,000A (S/D) and 5,000A, confirm the code with ElectriDistro when ordering.

51: 4 conductors. Ground (PE) runs through the housing: it is not a conductor.

52: 5 conductors. Ground (PE) is a full, separate conductor.

N: neutral. **PE**: protective conductor (ground).

7 · Ordering codes

Tap-off box code

Five fields: size, conductors, IP rating, poles and breaker current.

LV	2	T	52	54	-	3	-	160
Series	Size	Tap-off	Conductors	IP rating		Poles		Current (A)

Example · LV 2T5254-3-160
Box size 2 · five conductors · IP54.
3-pole, 160A breaker.

Box size

Code	Current
1	16–100A
2	125–160A
3	200–250A
4	315–400A
5	500–630A

Breaker poles

Code	Poles
3	3 poles
4	4 poles

Conductors

Code	Configuration
40	L1 + L2 + L3 + PEN
41	L1 + L2 + L3 + N
51	L1 + L2 + L3 + N · ground through housing
52	L1 + L2 + L3 + N + PE

Degree of protection

Code	Rating
41	IP41
42	IP42
54	IP54

Breaker current

Range	Unit
16–630	A

> **51**: 4 conductors. Ground (PE) runs through the housing: it is not a conductor.
> **52**: 5 conductors. Ground (PE) is a full, separate conductor.
> **PEN**: combined neutral and protective conductor.

ElectriDistro

8 · Quote your project

From drawings to budget quote in minutes

Our AI system reads your bill of materials
and sends you a budget estimate. An engineer reviews it.

Upload your project at electridistro.com
Excel, PDF or image of your bill of materials

Get a quote →

How it works

1. **Upload your file**
   Bill of materials, drawings or specification.
2. **AI reads it**
   Identifies sections, BENDs, boxes and ampacities.
3. **Get your estimate**
   A budget PDF arrives in your inbox instantly.
4. **Engineering review**
   Our team reviews it within 48 h and sends a correction if needed.

COMMERCIAL PARTNERS

Do you install or specify busway?

Register as an ElectriDistro Commercial Partner. No exclusivity.

- **Unit pricing** in your quotes
- **Customer referrals** in your region
- **Project pricing** quoted per project
- **Technical support** from our engineers

Register →
electridistro.com/integrator

electridistro.com
Product catalog and contact

Accepted formats
Excel, CSV, PDF, PNG or JPG

Engineering review
48 h max.; corrections if needed

WETOWN
Manufacturer

→

ElectriDistro
Exclusive distributor

→

Ecuador
Colombia
Peru
Authorized distribution channels

Technical data in this manual comes from the manufacturer, Wetown Electric Group, and may change without notice.
Confirm all values with ElectriDistro when ordering.

© ElectriDistro LLC. ElectriDistro™ · ED-MT-LVA-EN · Rev. 02 · October 2026