ElectriDistro

ED-MT-GM-EN
Rev. 02 · October 2026
English edition

Technical manual

GM Busway

Cast epoxy-resin busway with copper or aluminum conductors

IP68
Degree of protection

400–6,300A
Rated current

690V
Operating voltage

Cu · Al
Copper or aluminum

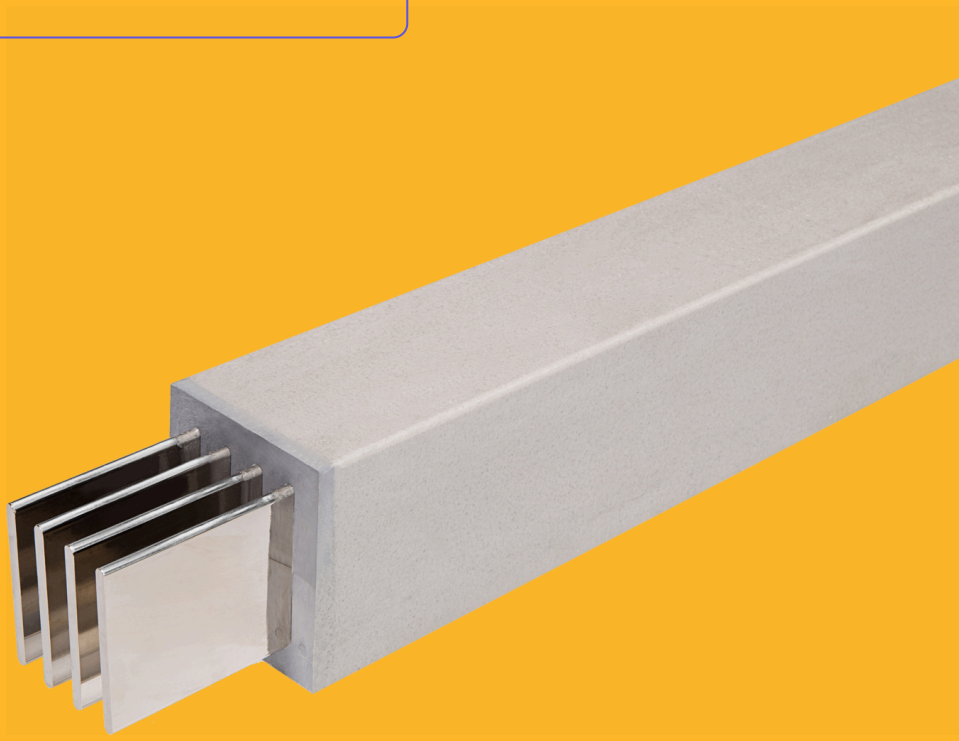

Manufactured by **Wetown Electric Group** · Distributed in the Americas by **ElectriDistro**
Authorized distribution channels: **BYB Electric Ecuador · Colombia · Peru**

WETOWN

Contents

Contents

1	Manufacturer	02
1.1	About this manual	02
1.2	Wetown Electric Group	03
1.3	Manufacturer backing	04
2	GM busway system	05
2.1	GM busway applications	05
2.2	Components and names	06
3	Construction features	07
4	Technical data	08
4.1	Copper: specifications, impedance and short-circuit rating	08
4.2	Copper: dimensions	09
4.3	Aluminum: specifications, dimensions and short-circuit rating	10
4.4	Aluminum: impedance and conductors	11
5	Components	12
5.1	Straight length	12
5.2	Switchboard or transformer connection	12
5.3	Bends	14
5.4	Offsets (Z-bends) and combination bend	15
5.5	Tees	16
5.6	Joint and covers	17
6	Installation	18
7	Quote your project	19

1.1 About this manual

Scope

GM cast-resin busway.
Copper: 400A to 5,000A.
Aluminum: 250A to 6,300A.

Conventions

Period for decimals, comma for thousands.
For example: 0.093 or 1,600.
Every table states the conductor:
copper or aluminum.

Data may change due to technical or production improvements.
Confirm values with ElectriDistro when ordering.

1.2 · Manufacturer

Wetown Electric Group

The busway manufacturer with the largest production plant in Asia.
30+ years designing, testing and manufacturing busway in China.

Wetown Electric Group headquarters · China

136,000m²	700,000m	30+	40+
industrial complex 84,000m² built	of busway per year	years manufacturing busway	countries with installed projects

1.2.1 Manufacturing capacity

Plants	4 manufacturing bases and 10+ subsidiaries in China and abroad
Annual capacity	Busway **700,000m** · copper bar **10,000t** · aluminum profile **4,000t**
Research	Three R&D centers in China
In-house laboratory	40+ tests · recognized by CNAS, DEKRA (formerly KEMA), ASTA and TÜV
Manufacturing	Automated assembly lines · high-speed saw cutting · silver-plated contacts
Technical alliances	GE (2007) · ABB (2016) · Westinghouse (2017)
Listed company	Shanghai Stock Exchange, STAR Market · code 688226

1.2.2 Global presence

1.3 · Manufacturer

Manufacturer backing

1.3.1 Technical alliances with global brands

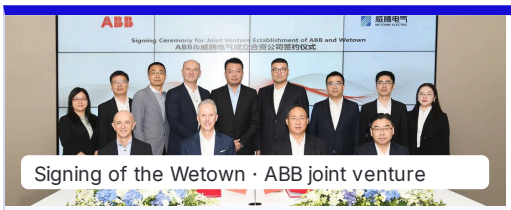

Signing of the Wetown · ABB joint venture

Since 2007 | Since 2016 | Since 2017

- Wetown works with **GE, ABB and Westinghouse** as technical allies.
- With ABB, it formed a joint venture: **Jiangsu Wetown ABB Busway**.
- That shared know-how backs every Wetown busway.

Extensive technical know-how, without the overhead of a global brand.
That's the ElectriDistro competitive edge.

1.3.2 Certifications

Management systems	ISO 9001 Quality	ISO 14001 Environment	OHSAS 18001 Health and safety	SA 8000 Social accountability			
Product certification	UL United States	CE European Union	CCC China	CIDET Colombia	EAC Eurasian Union	GOST-R Russia	RoHS Restricted substances
Testing laboratories	DEKRA Netherlands · formerly KEMA	ASTA United Kingdom					

1.3.3 Manufacturer reference projects

Marina Bay Sands Hotel
Singapore · hotel

Casino Tower
Macau · casino and hotel

National Stadium
Beijing · stadium

Asian Games Stadium
Stadium

Shenzhen Baohe Hospital
Shenzhen · hospital

Wanda Plaza
Shopping center

Panzhihua Steel (Group)
Steel industry

Gezhouba Group
Hydropower

1.3.4 Authorized distribution chain

WETOWN
Manufacturer
Wetown Electric Group
Design, testing and manufacturing

→

ElectriDistro
Exclusive distributor
ElectriDistro
Represents Wetown in the Americas

→

Authorized distribution channels
BYB Electric
- BYB Electric Ecuador
- BYB Electric Colombia
- BYB Electric Peru

Sales, technical support and warranty.

2 · System

GM busway system

Feeder busway fully encapsulated in cast epoxy resin.
For environments with water, dust, salt or chemical agents.

IP68
degree of protection
submersible

400–6,300A
copper: 400–5,000A
aluminum: 250–6,300A

690V
operating voltage
insulation: 1,000V

50 / 60Hz
rated
frequency

Conductors
Electrolytic copper
or 6101 T64 aluminum.

Encapsulation
Epoxy resin
Halogen-free mineral filler.

Installation
Horizontal (suspended)
or vertical.

2.1 GM busway applications

Where conventional busway cannot withstand the environment.

Ports, docks and shipyards

Petrochemical and metals

Hydroelectric plants

Buried installation

Flood-prone and submerged areas

Outdoor and tunnels

Illustrative images

2 · System

Components and names

The names in this manual match the ElectriDistro quote.

1
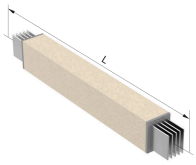
Straight length

2

Switchboard connector

3
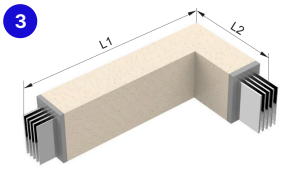

Horizontal bend

4
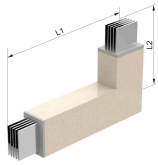
Vertical bend

5
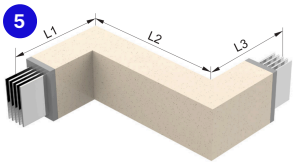

Horizontal offset

6
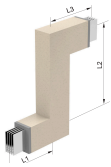
Vertical offset

7
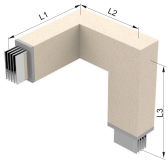
Combination bend

8
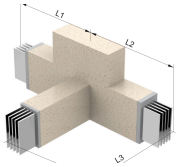
Horizontal tee

9
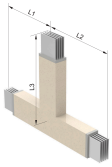
Vertical tee

10

Joint

11

Joint cover

12
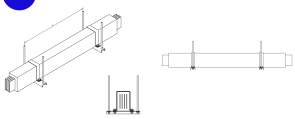
Hanger

	ElectriDistro name	Also called
1	**Straight length**	Feeder length, straight section
2	**Switchboard connector**	Flanged end, transformer connection
3	**Horizontal bend**	Flatwise L-bend
4	**Vertical bend**	Edgewise L-bend
5	**Horizontal offset**	Flatwise Z-bend
6	**Vertical offset**	Edgewise Z-bend
7	**Combination bend**	Flatwise + edgewise bend
8	**Horizontal tee**	Flatwise tee, T-branch
9	**Vertical tee**	Edgewise tee
10	**Joint**	Joint pack, section-to-section joint
11	**Joint cover**	Cover, joint housing
12	**Hanger**	Support, hanger bracket
13	**Vertical spring hanger**	Spring support, spring hanger

3 · Construction features

Design and performance

What cast-resin construction delivers in each environment.

3.1 IP68 degree of protection

- Straight length submerged in 1m of water for 9,000 hours.
- After the test, it is energized safely.
- Operates reliably even when submerged deeper than 1m.

3.2 Mechanical and environmental resistance

- Withstands 20-joule mechanical impacts.
- Withstands a high-pressure fire-hose jet.
- No cracking in long-term service from −50°C to +55°C.

3.3 Chemical and corrosion resistance

- Excellent resistance to corrosion and chemical agents.
- Resistant to electromagnetic interference.
- Resistant to rodents and insects.

3.4 Materials

- Copper: high-purity electrolytic copper.
- Aluminum: 6101 T64 high-conductivity alloy.
- Epoxy resin with halogen-free mineral filler.
- No toxic gas emission (MSDS report).

3.5 Insulating compound

ALUMINUM

Epoxy resin compound, formulated for low and medium voltage.

Electrical and thermal properties

Self-extinguishing	V0 6mm per UL94:1979
Rating	UL 94 V0, UL 746 HAI, HWI
Maximum operating temperature	75°C, including ambient temperature
Operating temperature	55°C above ambient temperature
Thermal conductivity	Good
Dielectric constant, 50Hz / 1 kHz / 1 MHz	5.32 / 4.03 / 3.50 (DIN 53483)
Volume resistivity	1.5^{12} Ω (DIN 53482)

Physical and mechanical properties

Color	Gray and black
Specific gravity, cured	1.55 per ISO 2781:1996
Viscosity	Low (EN 45545, NF F 16101)
Flexibility	Semi-flexible
Hardness	Approx. Shore D 79 (CQP-537-2)
Tensile strength	CQP-545-2 / ISO 527
Elongation at break	CQP-545-2 / ISO 527 / 9 N/mm²

4.1 · Technical data

Copper: specifications, impedance and short-circuit rating

Electrical data for GM busway with copper conductors.

Table 4.1 Electrical specifications

COPPER

Operating voltage	400–690V
Insulation voltage	690/1,000V
Rated current	400–5,000A
Frequency	50/60Hz
Degree of protection	IP68

Ambient temperature	−50°C to +55°C
System	3-phase, 4-wire or 3-phase, 5-wire
Enclosure color	Light gray or light yellow
Installation	Horizontal (suspended) or vertical
Standards	GB7251.1, GB7251.2, GB4208, GB5585.1, GB50054, IEC439-1, IEC439-2

Table 4.2 Short-circuit rating, impedance and voltage drop, 50Hz

COPPER

Rated current	Icw, 1s	Ipk	DC resistance, 20°C	Resistance	Reactance	Impedance	Line-to-line voltage drop (V/m)				
A	kA	kA	10^{-6} Ω/m	10^{-6} Ω/m	10^{-6} Ω/m	10^{-6} Ω/m	cosφ 0.6	cosφ 0.7	cosφ 0.8	cosφ 0.9	cosφ 1.0
400A			98.7	120.7	76.5	142.9	0.093	0.096	0.099	0.099	0.084
630A	30	63	74.0	94.6	64.6	114.6	0.118	0.122	0.125	0.124	0.103
800A			59.2	78.2	59.2	59.2	0.131	0.134	0.136	0.134	0.108
1,000A	50	105	49.4	66.5	49.3	49.3	0.137	0.141	0.143	0.141	0.115
1,250A			49.4	51.0	45.9	45.9	0.146	0.148	0.148	0.143	0.111
1,600A			26.9	39.9	41.1	41.1	0.157	0.158	0.157	0.150	0.111
2,000A	80	176	18.5	27.7	30.8	30.8	0.143	0.143	0.141	0.133	0.096
2,500A			14.8	23.4	24.9	24.9	0.147	0.148	0.146	0.139	0.102
3,200A			11.8	17.8	19.7	19.7	0.147	0.147	0.145	0.137	0.099
4,000A	100	220	9.3	14.5	15.3	15.3	0.145	0.146	0.144	0.137	0.100
5,000A			7.4	11.6	11.5	11.5	0.140	0.141	0.140	0.134	0.100

Icw (rated short-time withstand current): current withstood for 1s without damage.

Ipk (rated peak withstand current): maximum short-circuit peak value withstood.

Resistance, reactance and impedance per phase, phase-to-neutral, at rated load in steady state.

Voltage drop with the load concentrated at the end of the run.

COPPER

4.2 · Technical data

Copper: dimensions

Outside cross-section of the straight length by rated current and number of conductors.

4 conductors
3 phases + neutral
width 100mm

5 conductors
3 phases + neutral + ground
width 120mm

Table 4.3 Outside dimensions

COPPER

Rated current A	3-phase, 4-wire			3-phase, 5-wire		
	Conductors	Width W (mm)	Height H (mm)	Conductors	Width W (mm)	Height H (mm)
400A	4	100	60	5	120	60
630A	4	100	70	5	120	70
800A	4	100	80	5	120	80
1,000A	4	100	90	5	120	90
1,250A	4	100	110	5	120	110
1,600A	4	100	140	5	120	135
2,000A	4	100	190	5	120	170
2,500A	4	100	230	5	120	215
3,200A	4	100	310	5	120	300
4,000A	4	100	380	5	120	370
5,000A	4	100	460	5	120	480

How to use this table

1. Select the row by rated current.
2. Choose 4 or 5 conductors according to the project grounding system.
3. Use the width and height to size the space in the tray, trench or duct.

COPPER

4.3 · Technical data

Aluminum: specifications, dimensions and short-circuit rating

Data for GM busway with aluminum conductors.

Table 4.4 Electrical specifications

ALUMINUM

Operating voltage	AC 690V	Impact resistance	IK10
Insulation voltage	AC 1,000V	Maximum operating temperature	75°C
Impulse withstand voltage	8kV	Design ambient temperature	20°C
Rated current	250–6,300A	System	3 phases, 100% or 200% neutral, 100% isolated ground
Frequency	50/60Hz	Application	Indoor or outdoor, submersible and direct-burial
Degree of protection	IP55 / IP68	Standard	IEC 61439-6:2012 / UNE-EN 61439-6:2013

Table 4.5 Dimensions, weight and short-circuit rating

ALUMINUM

Rated current A	Ground vs. phase section %	Icw, 1s kA	Ipk kA	Width mm	Height mm	Weight kg/m
250A	100%	20	40	57	50	4.9
400A	100%	20	40	57	80	7.9
550A	100%	30	63	57	120	12.0
700A	100%	50	63	57	145	14.6
850A	100%	50	63	57	180	18.3
1,050A	100%	50	105	57	220	22.0
1,300A	100%	65	105	70	210	26.2
1,600A	100%	80	143	70	260	32.9
2,100A	50%	100	264	103	220	33.0
2,600A	50%	100	264	103	210	40.1
3,200A	50%	100	264	103	260	50.6
4,000A	50%	100	264	103	420	80.3
5,000A	50%	100	264	103	520	101.2
5,500A	50%	100	264	145	420	115.3
6,300A	50%	100	264	145	520	145.5

Maximum temperature rise at full load: 55°C above ambient temperature.

Approximate values.

ALUMINUM

4.4 · Technical data

Aluminum: impedance and conductors

Table 4.6 Impedance and voltage drop at full load

ALUMINUM

Rated current	AC resistance	Reactance	Impedance	Voltage drop per meter (V/m)	
A	μΩ/m	μΩ/m	μΩ/m	cosφ 0.8	cosφ 0.9
250A	269.97	33.66	272.06	0.102	0.112
400A	156.78	21.41	158.24	0.096	0.104
550A	101.93	15.45	103.10	0.087	0.094
700A	79.33	13.19	80.42	0.087	0.094
850A	66.78	12.68	67.97	0.090	0.097
1,050A	52.80	10.56	53.84	0.088	0.095
1,300A	40.44	8.82	41.40	0.085	0.091
1,600A	31.32	6.68	32.03	0.081	0.086
2,100A	26.40	6.34	26.92	0.088	0.095
2,600A	20.22	5.28	20.70	0.085	0.091
3,200A	15.66	3.34	16.01	0.081	0.086
4,000A	13.48	2.94	13.80	0.087	0.093
5,000A	10.44	2.23	10.70	0.084	0.090
5,500A	10.11	2.21	10.35	0.090	0.096
6,300A	7.83	1.67	8.01	0.082	0.088

3 phases + neutral, separate (isolated) ground, 1,000V.

Aluminum resistivity at 20°C: 2.82×10^{-8} Ω·m. Conductivity: 3.50×10^{7} S/m.

Table 4.7 Ambient temperature correction factor

ALUMINUM

0°C	5°C	10°C	15°C	20°C	25°C	30°C	35°C	40°C	45°C
1.1	1.09	1.07	1.04	1.00	0.95	0.875	0.8	0.7	0.6

Multiply the rated current by the factor for the site ambient temperature.

4.4.1 Conductor configurations (% of phase cross-section)

ALUMINUM

3P
3 phases

3P+N50%
3 phases + 50% neutral

3P+N100%
3 phases + 100% neutral

3P+PE50%
3 phases + 50% ground

3P+PE100%
3 phases + 100% ground

3P+N100%+PE50%
3 phases + 100% neutral + 50% ground

3P+N100%+PE100%
3 phases + 100% neutral + 100% ground

3P+N200%+PE100%
3 phases + 200% neutral + 100% ground

ALUMINUM

5.1–5.2 · Components

Straight length and switchboard connection

The straight length carries power between switchboard, transformer and loads.
The connector joins the busway to the switchboard or transformer.

5.1 Straight length

Figure 5.1 Straight length — example 1

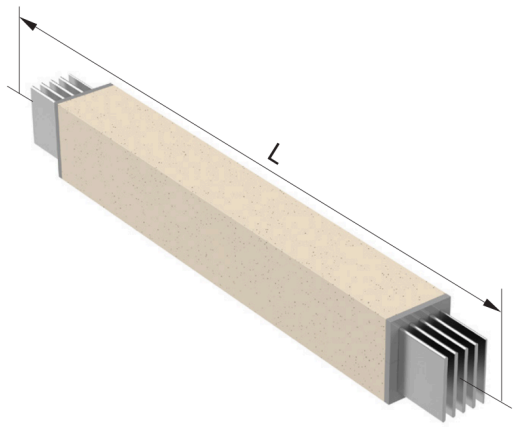

Figure 5.2 Straight length — example 2

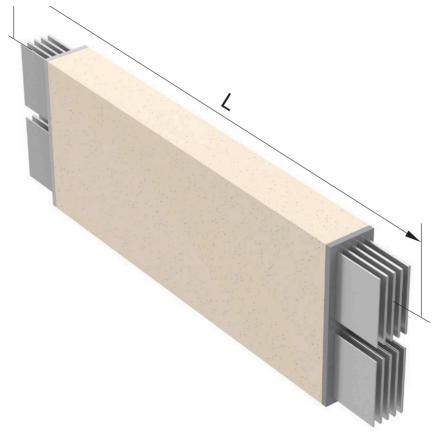

L: length of the straight section.

Table 5.1 Straight length dimensions — ALUMINUM

Rated current	Minimum length L1 (mm)	Standard length L1 (mm)
250–850A	400	3,200
1,050–6,300A	500	3,200

5.2 Switchboard or transformer connector

Figure 5.3 Switchboard connector — example 1

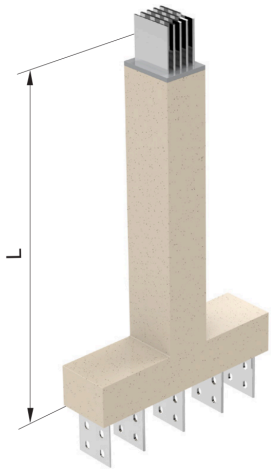

Figure 5.4 Switchboard connector — example 2

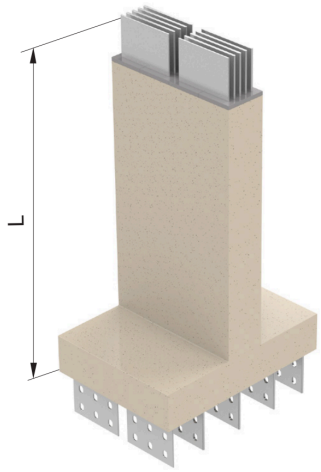

L: connector length. For special dimensions, contact ElectriDistro.

5.2 · Components

Switchboard connector: dimensions

Outside dimensions of the aluminum connector.

Figure 5.5 Switchboard connector A to I

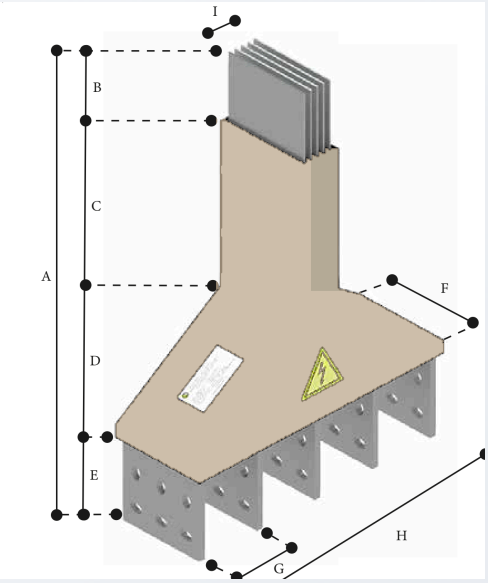

Connector data

3 phases + 100% neutral + 50% ground.
Operating voltage: AC 690V.
Degree of protection: IP55 or IP68.
Standard A: 600mm to 1,000mm.

Table 5.2 Switchboard connector dimensions — ALUMINUM

Rated current	A (mm)	B (mm)	C (mm)	D (mm)	E (mm)	F (mm)	G (mm)	H (mm)	I (mm)
250A	600	100	240	140	120	50	100	420	57
400A	600	100	240	140	120	80	100	420	57
550A	600	100	240	140	120	120	100	420	57
700A	600	100	240	140	120	145	100	420	57
850A	600	100	240	140	120	180	100	420	57
1,050A	600	100	240	140	120	220	100	420	57
1,300A	600	100	240	140	120	210	100	420	70
1,600A	600	100	240	140	120	260	100	420	70
2,100A	600	100	220	160	120	220	100	470	103
2,600A	600	100	220	160	120	210	100	470	103
3,200A	600	100	220	160	120	260	100	470	103
4,000A	600	100	220	160	120	420	100	470	103
5,000A	600	100	220	160	120	520	100	470	103
5,500A	600	100	220	160	120	420	100	470	145
6,300A	600	100	220	160	120	520	100	470	145

Minor dimensional variations do not affect performance.

ALUMINUM

5.3 · Components

Bends

Change the direction of the run.
L1 and L2: length of each leg of the bend.

Figure 5.6 Horizontal bend — flatwise

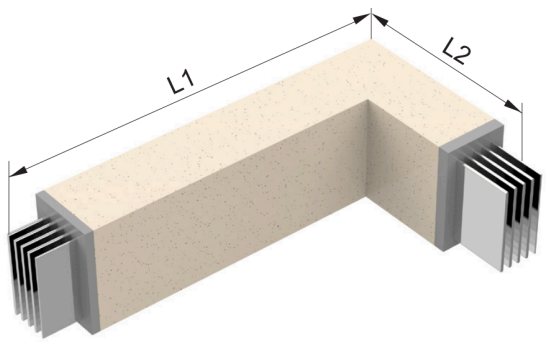

Figure 5.7 Vertical bend — edgewise

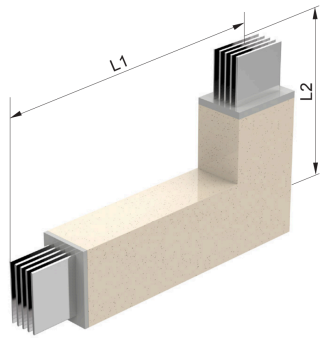

Table 5.3 Minimum bend dimensions

COPPER

Rated current	Horizontal bend, minimum L1×L2 (mm)	Vertical bend, minimum L1×L2 (mm)
400–2,500A	300×300	300×300×300
3,150–5,000A	350×350	350×350×350

Table 5.4 Bend dimensions

ALUMINUM

Rated current	Minimum L1–L2 (mm)	Standard L1–L2 (mm)	Maximum L1–L2 (mm)
250A	400	500	1,500
400A	400	500	1,500
550A	400	500	1,500
700A	400	500	1,500
850A	400	500	1,500
1,050A	400	500	1,500
1,300A	400	500	1,500
1,600A	400	600	1,500
2,100A	500	500	1,500
2,600A	500	500	1,500
3,200A	500	600	1,500
4,000A	500	500	1,500
5,000A	500	600	1,500
5,500A	500	600	1,500
6,300A	500	600	1,500

> In aluminum, the bend is welded or formed, with the same dimensions.

5.4 · Components

Offsets and combination bend

Two changes of direction in a single piece, to clear obstacles.
L1, L2 and L3: length of each section of the piece.

Figure 5.8 Horizontal Z

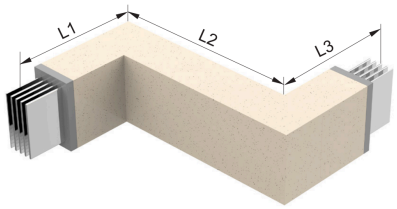

Figure 5.9 Vertical Z

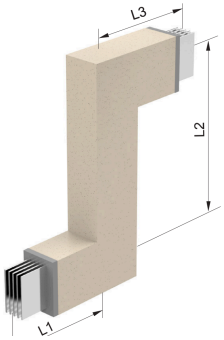

Figure 5.10 Combination

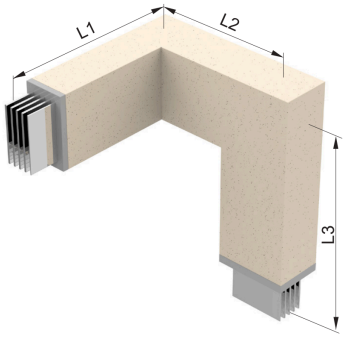

Table 5.5 Minimum dimensions, L1×L2×L3

COPPER

Rated current	Horizontal offset (mm)	Vertical offset (mm)	Combination bend (mm)
400–2,500A	300×300×300	300×300×300	300×300×300
3,150–5,000A	450×450×450	350×350×350	350×350×350

Table 5.6 Offset dimensions

ALUMINUM

Rated current	Min. L1×L2×L3 (mm)	Std. L1×L2×L3 (mm)	Max. L1×L2×L3 (mm)
Horizontal offset · 250–6,300A	600×600×600	600×600×600	1,000×1,000×1,000
Vertical offset · 250–6,300A	500×500×500	500×500×500	1,000×1,000×1,000

Table 5.7 Combination bend dimensions

ALUMINUM

Rated current	Minimum L1×L2×L3 (mm)	Standard L1×L2×L3 (mm)
250–1,600A	400×400×400	500×500×500
2,100–6,300A	600×600×600	600×600×600

> For special dimensions, contact ElectriDistro.

5.5 · Components

Tees

Split the run into two branches.
L1, L2 and L3: length of each leg of the tee.

Figure 5.11 Horizontal tee — flatwise

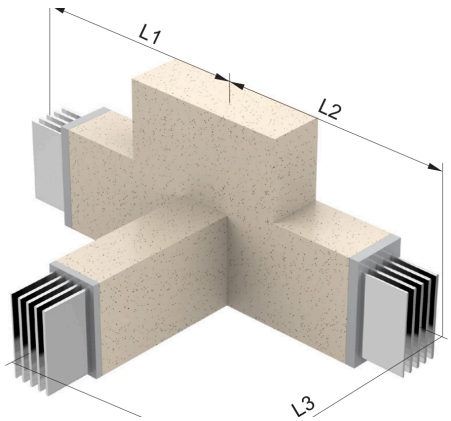

Figure 5.12 Vertical tee — edgewise

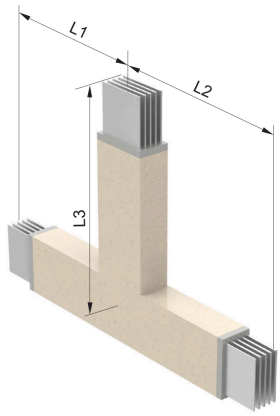

Table 5.8 Horizontal tee — COPPER

Rated current	Horizontal tee, L1×L2×L3 (mm)
400–1,250A	450×450×450
1,600–2,000A	500×500×500
2,500–4,000A	550×550×550
5,000A	650×650×650

Table 5.9 Vertical tee — COPPER

Rated current	Vertical tee, minimum L1×L2×L3 (mm)
400–2,500A	300×300×300
3,150–5,000A	350×350×350

Table 5.10 Tee dimensions — ALUMINUM

Rated current	Minimum L1×L2 (mm)	Standard L1×L2 (mm)	Maximum L1×L2×L3 (mm)
250–6,300A	500×1,000	500×1,000	1,000×1,000×1,000

> Special tees: contact ElectriDistro for custom dimensions.

5.6 · Components

Joint and covers

Parts that connect the straight lengths and protect the connection.

5.6.1 Joint

Figure 5.13 Joint — reference images

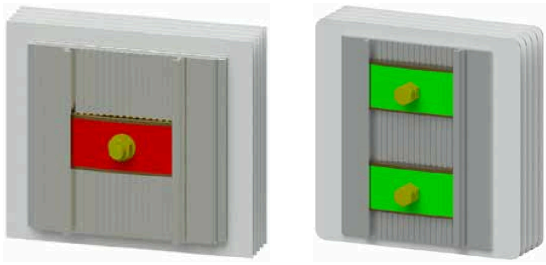

Function

Pressure-type joint between straight lengths.
Moves easily during earthquakes.
Absorbs short-circuit forces.
Prevents joints from deforming or loosening.

5.6.2 Covers

Figure 5.14 Covers — reference images

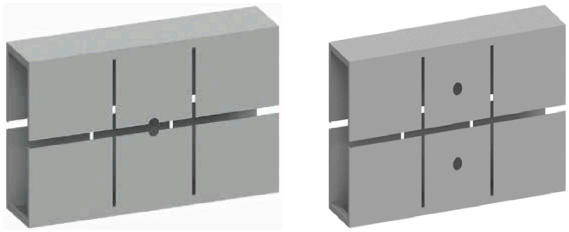

Function

Protect the bar ends and the joint.
Degree of protection IP55.
Keep out dust
and water jets.

5.6.3 Joint degree of protection

Rating	Joint	Installation
IP55	Joint with covers, not encapsulated	Indoor
IP68	Resin-encapsulated joint	Outdoor, buried or submerged

Joint installation method: see the installation manual.

6 · Installation

Installation

Supports for horizontal and vertical mounting.

6.1 Horizontal mounting: hanger

Figure 6.1 Hanger — L: distance between supports

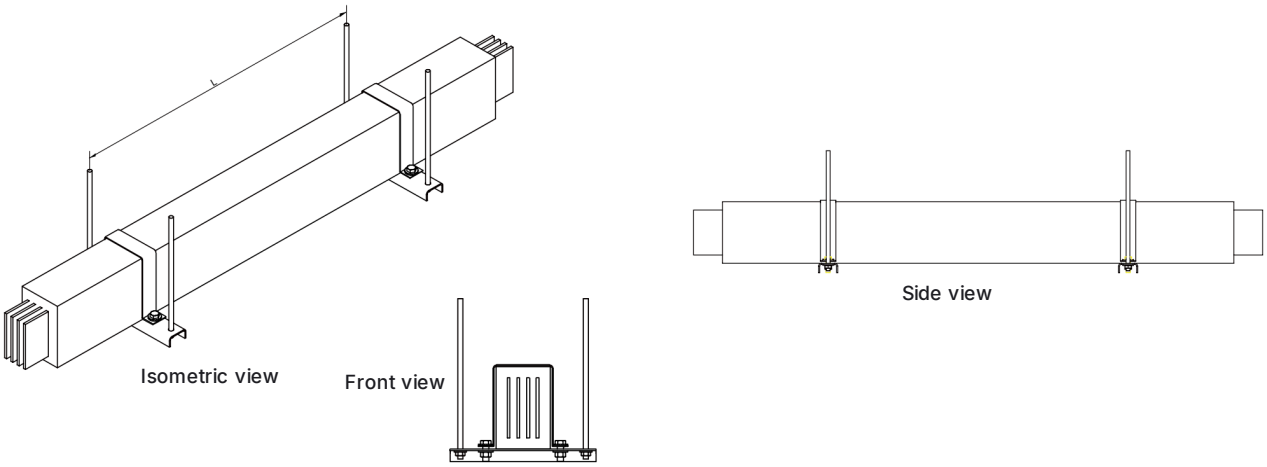

6.2 Vertical mounting: spring hanger

Figure 6.2 Vertical spring hanger — fixed to the wall or floor slab

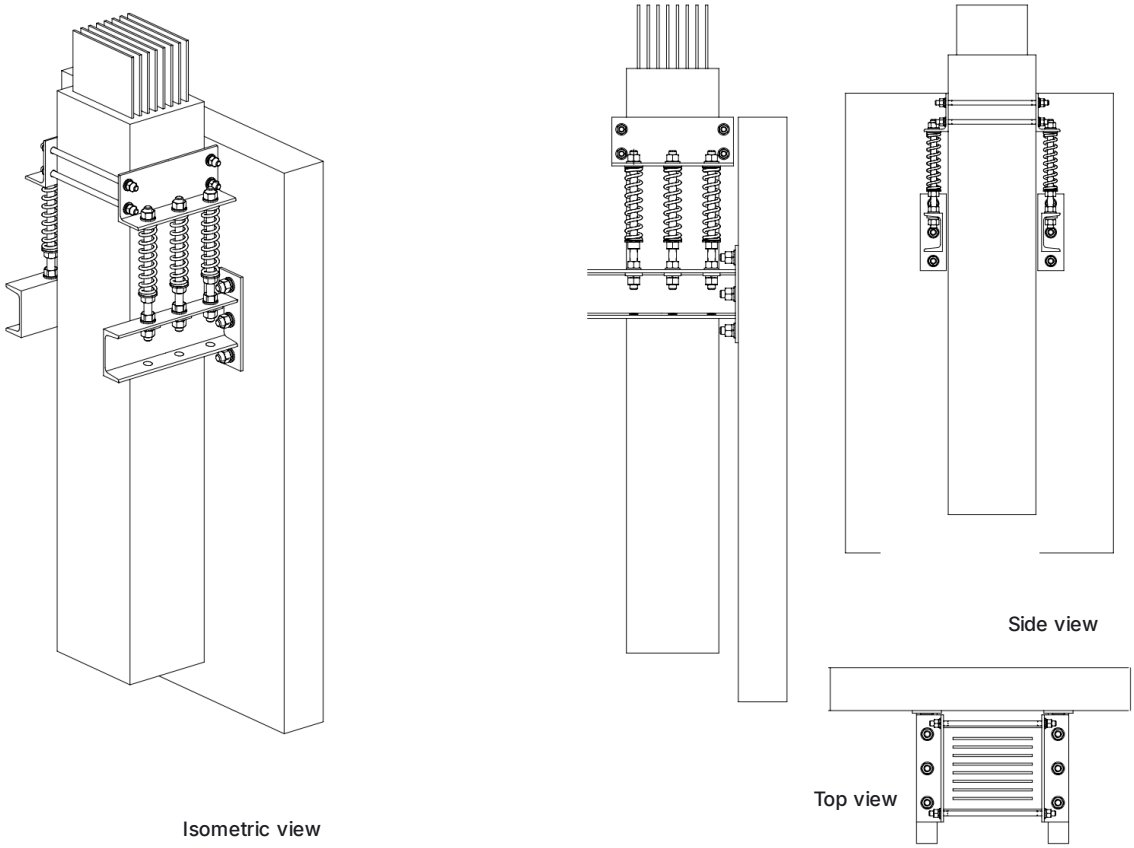

For support spacing L and special loads, contact ElectriDistro.

ElectriDistro

7 · Quote your project

From drawings to estimate in minutes

Our AI system reads your bill of materials
and sends you a reference estimate. An engineer reviews it.

Upload your project at electridistro.com
Excel, PDF or image of your bill of materials

Get a quote →

How it works

1. **Upload your document**
   Bill of materials, drawings or specification.
2. **AI reads it**
   Identifies straight lengths, bends, boxes and ratings.
3. **Get your estimate**
   A reference PDF arrives in your inbox instantly.
4. **Engineering review**
   Our team reviews it within 48 h; if there is an error, we send a correction.

COMMERCIAL PARTNERS

Do you install or specify busway?

Register as an ElectriDistro Commercial Partner. No exclusivity.

- **Unit pricing** on your quotes
- **Client referrals** in your region
- **Project discounts** per project
- **Technical support** live

Register →

electridistro.com/integrator

- **electridistro.com** Product catalog and contact
- **Accepted formats** Excel, CSV, PDF, PNG or JPG
- **Engineering review** Within 48 h max.

WETOWN Manufacturer → ElectriDistro Exclusive distributor → Ecuador Colombia Peru Authorized distribution channels

Technical data in this manual may change without notice. © ElectriDistro LLC. ElectriDistro™
Confirm values with ElectriDistro when ordering.