ED-MT-DP-EN
Rev. 02 · October 2026
English edition

Technical manual

Data Pro Busway

Track busway for data centers.
Tap off power at any point.

250–1,000A
AC rated current

16–125A
Tap-off units

IP42
Degree of protection

3 phases + N + PE
Conductor system

Manufactured by **Wetown Electric Group** · Distributed in the Americas by **ElectriDistro**
Authorized distribution channels: **BYB Electric Ecuador** · **Colombia** · **Peru**

Contents

Contents

1	Manufacturer	**02**
1.1	About this manual	02
1.2	Wetown Electric Group	03
1.3	Manufacturer backing	04
2	Data Pro busway system	**05**
2.1	Applications	05
2.2	Components and names	06
3	Design features	**07**
3.9	Smart monitoring	09
4	Technical data	**10**
4.1	General parameters and certifications	10
4.2	Busway parameters	11
4.3	Tap-off unit parameters	12
5	Components	**13**
5.1	Vertical tap-off unit	13
5.2	Horizontal tap-off unit	14
5.3	BEND, flange end and hanger	15
5.4	Feeder box	16
6	Monitoring modules	**17**
7	Catalog numbers	**19**
8	Quote your project	**21**

1.1 About this manual

Scope

Data Pro track busway.
Lengths rated 250A to 1,000A AC.
Tap-off units rated 16A to 125A.

Conventions

Period for decimals, comma for thousands.
Example: 0.0575 or 1,000.
Copper conductors across the series.

Data may change due to technical or production improvements.
Confirm values with ElectriDistro when ordering.

1.2 · Manufacturer

Wetown Electric Group

The busway manufacturer with the largest production plant in Asia.
30+ years designing, testing and manufacturing busway in China.

Wetown Electric Group headquarters · China

136,000m²	700,000m	30+	40+
industrial complex 84,000m² built	of busway per year	years building busway	countries with installed projects

1.2.1 Manufacturing capacity

Plants	4 manufacturing bases and 10+ subsidiaries in China and abroad
Stated capacity	Busway **700,000m** · copper bar **10,000t** · aluminum profile **4,000t**
Research	Three R&D centers in China
In-house laboratory	40+ tests · recognized by CNAS, DEKRA (formerly KEMA), ASTA and TÜV
Manufacturing	Automated assembly lines · high-speed saw cutting · silver-plated contacts
Technical alliances	GE (2007) · ABB (2016) · Westinghouse (2017)
Listed company	Shanghai Stock Exchange, STAR Market · code 688226

1.2.2 Global presence

1.3 · Manufacturer

Manufacturer backing

1.3.1 Technical alliances with global brands

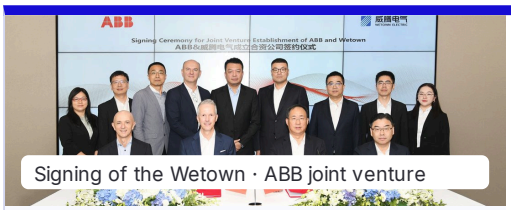

Signing of the Wetown · ABB joint venture

GE	ABB	Westinghouse
Since 2007	Since 2016	Since 2017

- Wetown works with **GE, ABB and Westinghouse** as technical allies.
- With ABB, it formed a joint venture: **Jiangsu Wetown ABB Busway**.
- That shared know-how backs every Wetown busway.

Extensive technical know-how, without the overhead of a global brand.
That's the ElectriDistro competitive edge.

1.3.2 Certifications

Management systems	ISO 9001 Quality	ISO 14001 Environment	OHSAS 18001 Health & safety	SA 8000 Social accountability			
Product certification	UL United States	CE European Union	CCC China	CIDET Colombia	EAC Eurasian Union	GOST-R Russia	RoHS Restricted substances
Testing laboratories	DEKRA Netherlands · formerly KEMA	ASTA United Kingdom					

1.3.3 Manufacturer reference projects

Marina Bay Sands Hotel
Singapore · hotel

Casino Tower
Macau · casino and hotel

National Stadium
Beijing · stadium

Asian Games Stadium
Stadium

Shenzhen Baohe Hospital
Shenzhen · hospital

Wanda Plaza
Shopping center

Panzhihua Steel (Group)
Steel industry

Gezhouba Group
Hydropower

1.3.4 Authorized distribution chain

WETOWN
Manufacturer
Wetown Electric Group
Design, testing and manufacturing

→

ElectriDistro
Exclusive distributor
ElectriDistro
Represents Wetown in the Americas

→

Authorized distribution channels
BYB Electric
- BYB Electric Ecuador
- BYB Electric Colombia
- BYB Electric Peru

Sales, technical support and warranty.

2 · System

Data Pro busway system

Track busway: the tap-off unit plugs in at any point along the length.
Built for indoor spaces with many changing loads, such as data centers.

250–1,000A
alternating current
DC: 315–1,600A

16–125A
tap-off unit
circuit breaker

IP42
busway length and
tap-off unit

3P + N + PE
3 phases, neutral
and ground

Figure 2.1 Data Pro system — feeder box, straight length, tap-off unit and hanger

2.1 Applications

Low operating temperature, good heat dissipation and flexible tap-off.

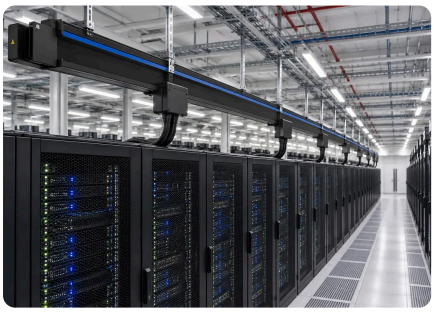
Data centers

High-performance computing

Cryptocurrency mining

Laboratories and medical buildings

Telecom central offices

Illustrative images

2 · System

Components and names

The names in this manual match the ElectriDistro quote.

1

Straight length

2
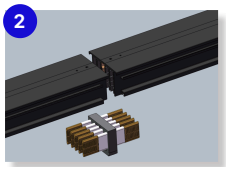
Spring-contact joint

3

Tap-off unit

4
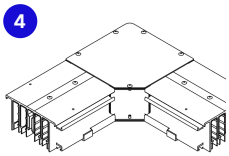
Horizontal BEND

5
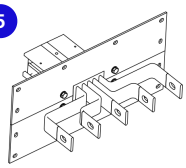
Flange end

6
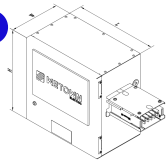
Feeder box with display

7
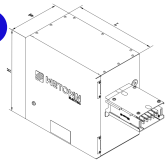
Feeder box without display

8
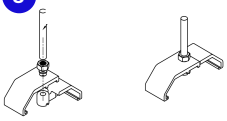
Hanger

9

Power monitoring module

10

Temperature monitoring module

	ElectriDistro name	Also called
1	**Straight length**	Track busway section, feeder
2	**Spring-contact joint**	Joint, section-to-section connection
3	**Tap-off unit**	Plug-in unit, tap-off box
4	**Horizontal BEND**	Flat bend, L-bend
5	**Flange end**	Switchboard connector, end connection
6	**Feeder box with display**	End feed box with touch screen
7	**Feeder box without display**	End feed box
8	**Hanger**	Support, hanger bracket
9	**Power monitoring module**	IBT403-M1, smart meter
10	**Temperature monitoring module**	IBT403-T1, temperature sensor

3 · Design features

Design and performance

What each design detail of the Data Pro busway delivers.

3.1 Tap off at any point

- The entire straight length accepts tap-off units.
- Position adjustable to the millimeter.
- Take power exactly where you need it.

3.2 Sliding tap-off unit

- Original sliding-track design.
- Hooks on and slides easily.
- Locks automatically, no tools needed.
- One person installs it in minutes.

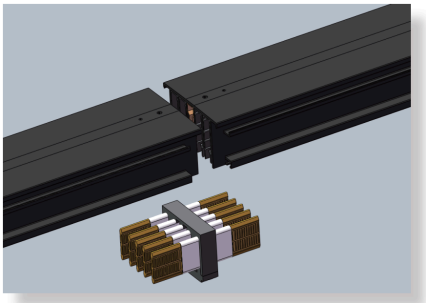

3.3 Spring-contact joint (patented)

- One-piece installation.
- No risk of loosening.
- Contact pressure balances automatically.
- Tolerates installation errors.

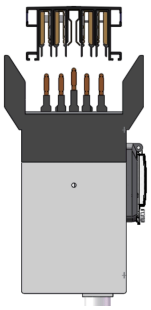

3.4 Secure unit connection

- Two-sided, self-limiting contact.
- Locks automatically in place (patented).
- Ground pin (PE) makes first, breaks last.

3 · Design features

Design and performance

Safety, temperature and system flexibility.

3.5 Expandable ground system

- Separate ground conductor (PE).
- Expandable up to 100%.
- Mounting position can be customized.

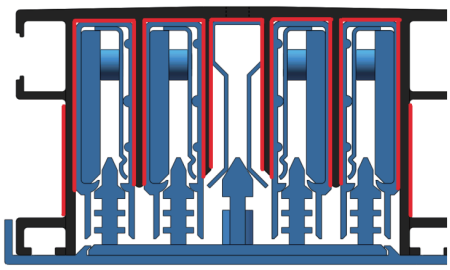

3.6 Conduction and heat dissipation

- Dissipation area increased to 150%.
- 30% more heat dissipation.
- Very low operating temperature across the series.

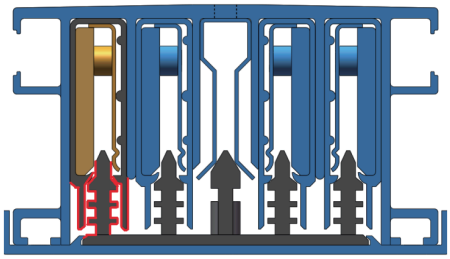

3.7 Safe structural design

- No risk of phase-to-phase short circuit.
- Maximum creepage distance: 60mm.

3.8 Modular, adjustable design

- Parts shared with standard busway.
- Universal for all tap-off units.
- Snap-fit mounting and standard sealed groove.
- Snap-on end cover.

3.9 · Design features

Smart monitoring

Real-time busway supervision, on site or in the cloud.

Functions

Remote metering and supervision.
Remote adjustment and control.
Cloud and mobile app in real time.

Standard

GB/T 7251.8-2020.
Smart low-voltage equipment.

Figure 3.1 Monitoring architecture — from the busway to the cloud

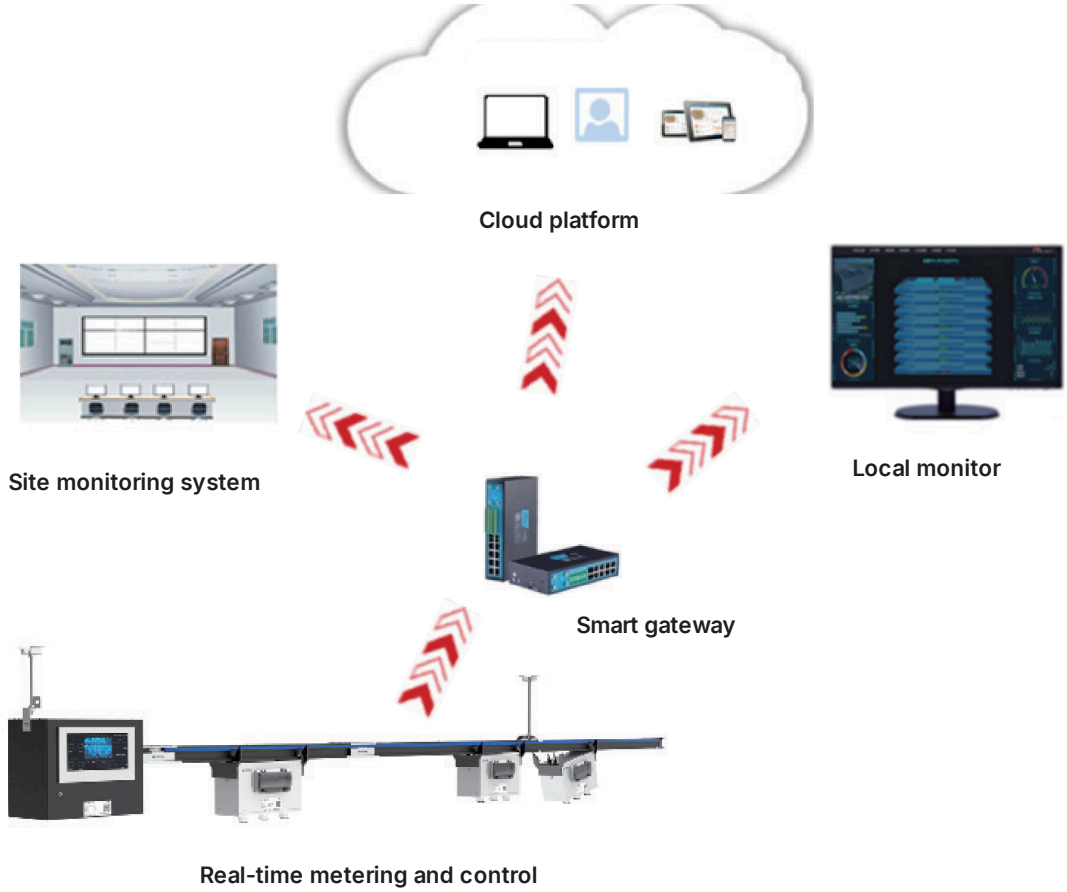

> Monitoring modules are described in section 6.
> The smart module is optional on feeder boxes and tap-off units.

4.1 · Technical data

General parameters and certifications

Materials, construction and service conditions of the series.

Materials

Conductor	T2 electrolytic copper
Housing	Aluminum-magnesium-silicon alloy
Conductor finish	Silver-plated full length*
Housing finish	Epoxy powder coat, electrostatic*

Construction

Busway degree of protection	IP42
Tap-off unit degree of protection	IP42
Conductor system	3 phases + neutral + ground (3L+N+PE)
Tap-off unit outputs	1, 3 or 6 circuits, per project

Normal service conditions

Location	Indoor
Minimum ambient temperature	−5°C
Maximum ambient temperature	+50°C
Maximum 24 h average temperature	+35°C
Maximum relative humidity	50% at 40°C
Pollution degree	2
Installation altitude	≤ 2,000m
Mounting	Horizontal, suspended or in raised-floor trench

* Can be changed to customer requirements. Design standard: GB/T 7251.8-2020.

4.1.1 Certifications

DEKRA CE — Lengths 250–1,000A AC and 315–1,600A DC: DEKRA (formerly KEMA) and CE.

DEKRA CE — Tap-off units 16–100A: DEKRA and CE.

CCC — Lengths 250–1,000A AC and units 16–100A: CCC type II, voluntary.

CQC — Lengths 315–1,600A DC: CQC, safety of DC low-voltage assemblies.

GB/T 7251.8 — Certification as complete smart equipment.

YD 5083 — Seismic certification, class 9.

IEC 60068-3-3 — Seismic certification, zone 4.

4.2 · Technical data

Busway parameters

Current, dimensions, short-circuit rating and impedance of the length.

Table 4.1 Parameters by rated current

AC rated current (A)	—	250	400*	400**	500	630	800	1,000
DC rated current (A)	315	400	630	—	800	1,000	1,200	1,600
Length height H (mm)	70						78	95
Length width W (mm)	120							
Icw, 1s (kA) · CCC	10			30			40	50
Ipk (kA) · CCC	17			63			80	105
Icw, 1s (kA) · DEKRA	10			—	20	30	40	50
Ipk (kA) · DEKRA	17			—	40	63	80	105
Resistance R20 (mΩ/m)	—	0.3591	0.2298	0.1436	0.1149	0.0912	0.0718	0.0575
Reactance X (mΩ/m)	—	0.267	0.1709	0.1068	0.0854	0.0678	0.0534	0.0427
Impedance Z20 (mΩ/m)	—	0.4475	0.2864	0.179	0.1432	0.1136	0.0895	0.0716

400*: economy type, lower short-time current.

400**: high short-time performance type, CCC certification only.

All other AC and DC ratings carry DEKRA (formerly KEMA), CE and CCC/CQC certification.

X of the 630A length is measured; R20 and Z20 are calculated. Values for other ratings are theoretical calculations.

Icw (rated short-time withstand current): current withstood for 1s without damage.

Ipk (rated peak withstand current): maximum peak value withstood.

Table 4.2 Voltages

Operating voltage without tap-off unit	1,000V
Operating voltage with tap-off unit	400V
Insulation voltage without tap-off unit	1,000V
Insulation voltage with tap-off unit	500V
Impulse withstand voltage without tap-off unit	8kV
Impulse withstand voltage with tap-off unit	6kV (63A and below) · 4kV (63–125A)

Figure 4.1 **Cross-section** W width · H height

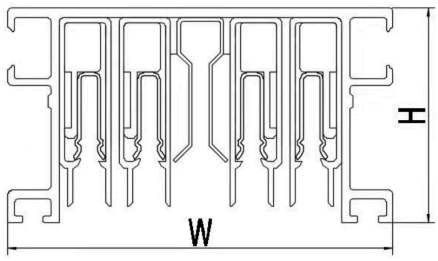

4.3 · Technical data

Tap-off unit parameters

The tap-off unit draws power from the length and protects each circuit.

Table 4.3 General parameters

Breaker current (A)	16–63	80–125
Unit height H (mm)	220	
Connection box thickness W (mm)	128	
Length of 3-output unit L (mm)	336*	550*
Smart module (U, I · GB/T 7251.8-2020)	Optional	
Smart module (U, I, T · GB/T 7251.8-2020)	Optional	
Outputs	Standard 3 outputs · optional 1 or 6 outputs	
Output type	Fixed receptacle · optional pendant receptacle or cable terminal	
Mounting	Vertical or horizontal	

* Length and dimensions may vary with the configuration.

Figure 4.2 Tap-off unit

L length · W connection box thickness

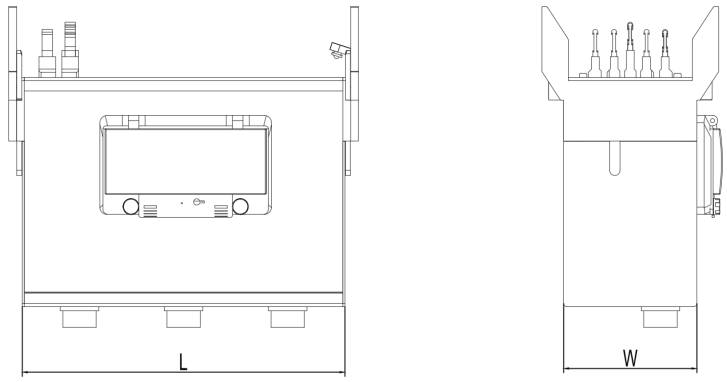

Table 4.4 Configurations

Mounting	Output	Rated current (A)	Dimensions L × W × H (mm)
Vertical	1 single-phase circuit	16–100	268 × 170 × 220
Vertical	3 single-phase circuits	16–100	336 × 170 × 220
Vertical	6 single-phase circuits	16–100	550 × 170 × 220
Horizontal	1 single-phase circuit	16–100	268 × 128 × 220
Horizontal	3 single-phase circuits	16–100	336 × 128 × 220
Horizontal	6 single-phase circuits	16–100	550 × 128 × 220

Standard configuration: 3 single-phase circuits. Can be customized per project.

5.1 · Components

Vertical tap-off unit

Vertical mounting on the length. Rated current: 16–100A.
Dimensions for 1, 3 and 6 circuits: see Table 4.4.

Figure 5.1 **1 circuit** single-line

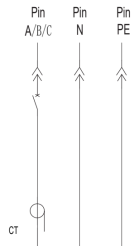

Figure 5.2 **3 or 6 circuits** single-line diagram

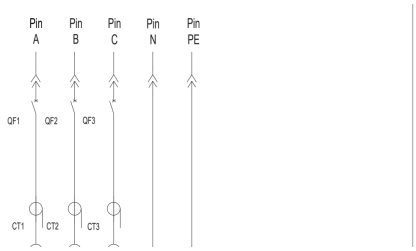

Figure 5.3 **Mounted on the length** example

QF: circuit breaker for each circuit. CT: current transformer.
Pin A/B/C, N and PE: phases, neutral and ground.

5.1.1 Output types · views and dimensions (mm)

Direct cable output
Cable exits the unit.

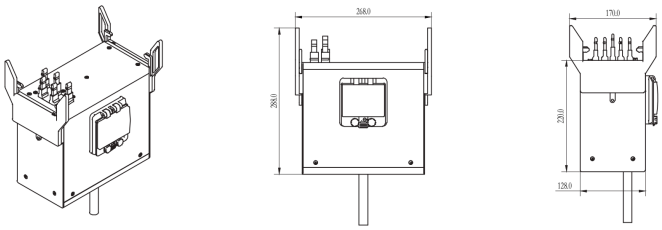

Fixed industrial receptacle
Receptacle mounted on the unit.

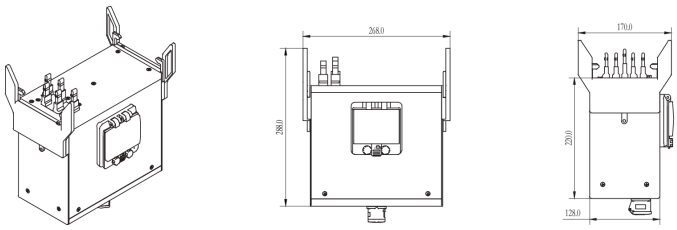

Pendant industrial receptacle
Receptacle at the end of a cable.

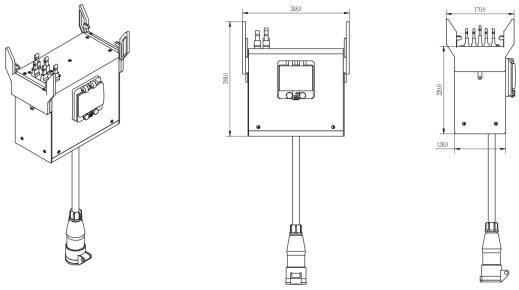

Standard configuration: 3 single-phase circuits, customizable.

5.2 · Components

Horizontal tap-off unit

Horizontal mounting on the length. Rated current: 16–100A.
Dimensions for 1, 3 and 6 circuits: see Table 4.4.

Figure 5.4 **1 circuit** single-line

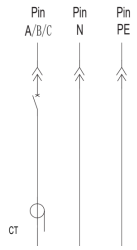

Figure 5.5 **3 or 6 circuits** single-line diagram

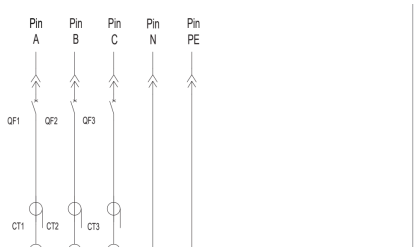

Figure 5.6 **Mounted on the length** example

QF: circuit breaker for each circuit. CT: current transformer.
Pin A/B/C, N and PE: phases, neutral and ground.

5.2.1 Output types · views and dimensions (mm)

Direct cable output
Cable exits the unit.

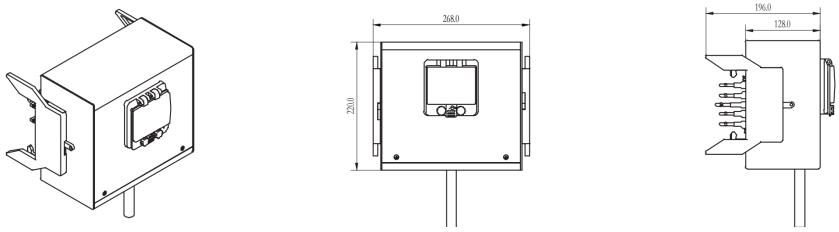

Fixed industrial receptacle
Receptacle mounted on the unit.

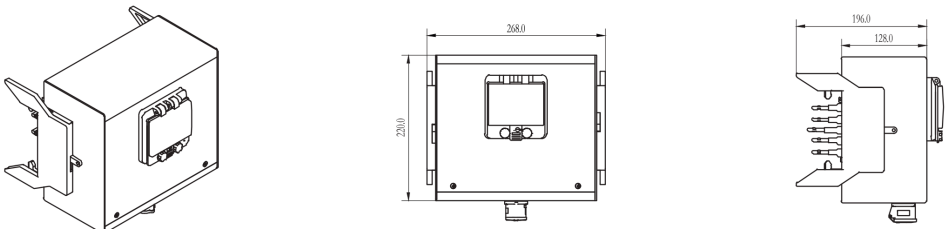

Pendant industrial receptacle
Receptacle at the end of a cable.

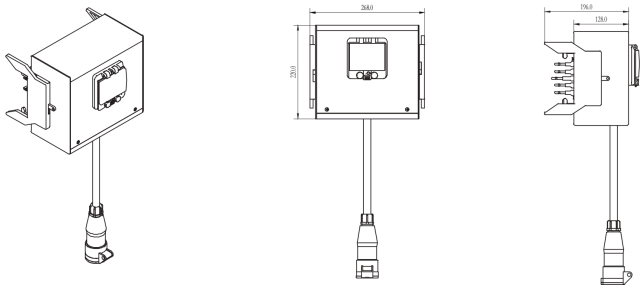

> Standard configuration: 3 single-phase circuits, customizable.

5.3 · Components

BEND, flange end and hanger

Parts to change direction, connect to the switchboard and suspend the run.

5.3.1 Horizontal BEND

Figure 5.7 Horizontal BEND — isometric view

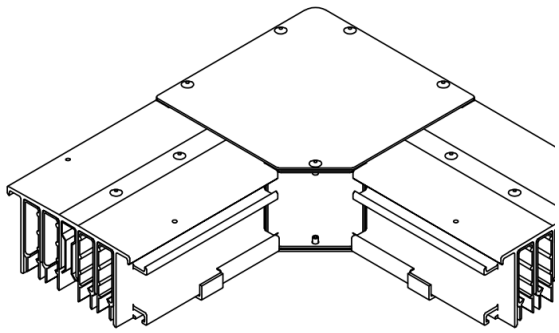

Figure 5.8 Horizontal BEND — X and Y dimensions

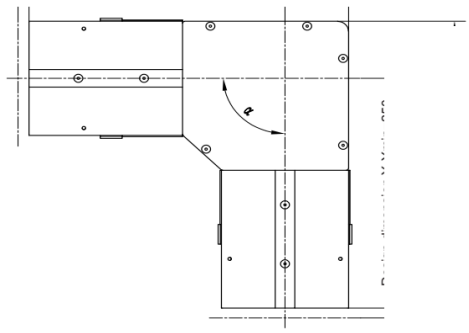

Design dimensions X and Y: 250mm minimum. Outside dimension: X + 50mm and Y + 50mm. Custom angle available.

5.3.2 Flange end

Figure 5.9 Flange end — types A, B, C · mm

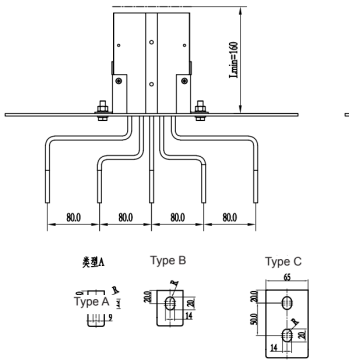

Figure 5.10 Flange end — isometric view

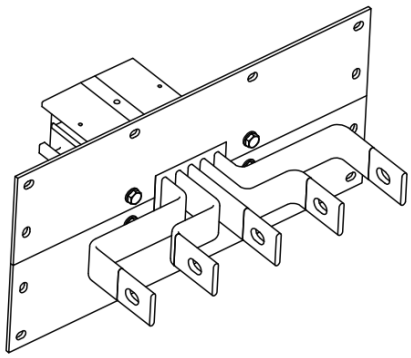

5.3.3 Hanger

Figure 5.11 Hanger — dimensions (mm)

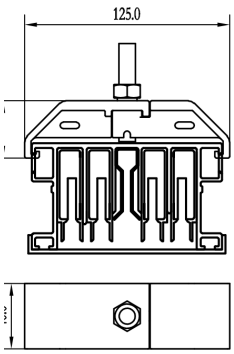

Figure 5.12 Hanger — 10mm threaded rod

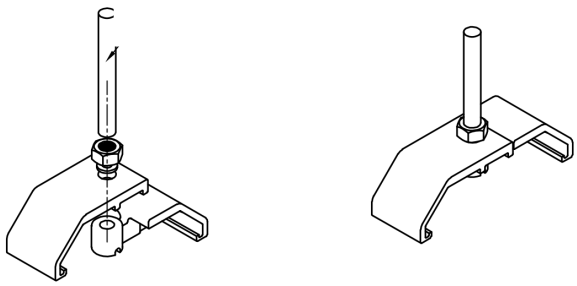

The 10mm diameter threaded rod, nut and washer are supplied by the customer.

5.4 · Components

Feeder box

Receives the incoming cable and energizes the length.
Available with or without touch screen.

Figure 5.13 **Feeder box** with touch screen

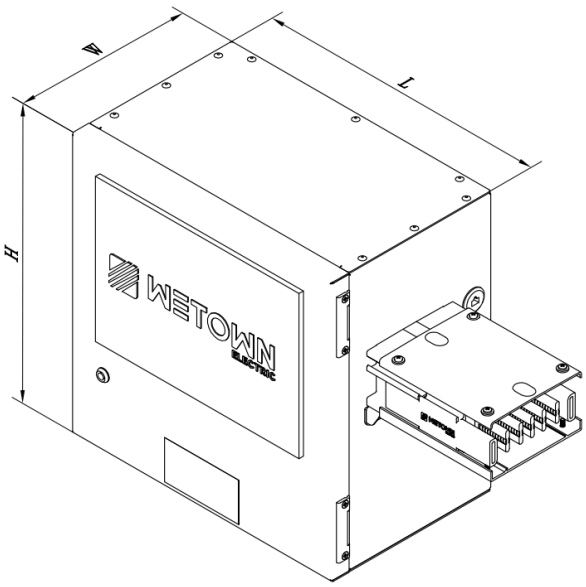

Figure 5.14 **Feeder box** without display

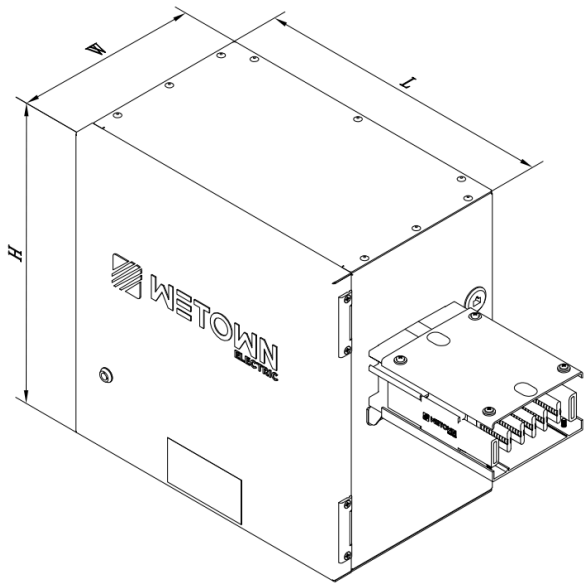

Current
250A to 1,000A.

Smart module
Optional, per GB/T 7251.8.

Types
Box type or flange end.

See the feeder box catalog number in section 7.

6 · Monitoring modules

IBT403 monitoring modules

IBT403-M1 power module and IBT403-T1 temperature module.

6.1 IBT403-M1 · power monitoring

Metering	Phase and line voltage · current · active and reactive power · apparent power · power factor · line frequency · voltage and current total harmonic distortion · fundamental voltage and current
Energy	Forward and reverse active and reactive energy · apparent energy · forward and reverse fundamental active and reactive energy
Min/max logging	Daily, monthly and yearly: phase and line voltage, current, power, power factor, line frequency
Storage	Electrical parameters · energy data · alarms (voltage, current, active and reactive power, power factor, frequency)
Settings	Thresholds, transformer ratio and other parameters

Hardware

Power supply: 220V AC.
Indicators: power, run, communication and alarm.
2 RS485 ports · firmware update port.
Voltage and current inputs.
DIN-rail mounting.

6.2 IBT403-T1 · temperature monitoring

Metering	Temperature at 4 points
Min/max logging	Daily, monthly and yearly temperature
Storage	Temperature data · alarms
Settings	Alarm temperature

Hardware

Power supply: 220V AC.
Indicators: power, run, communication and alarm.
2 RS485 ports · firmware update port.
Input for temperature sensors.
DIN-rail mounting.

6.3 · Monitoring modules

Technical specifications

Common and module-specific data.

Table 6.1 IBT403-M1 and IBT403-T1 specifications

Parameter	IBT403-M1	IBT403-T1
Degree of protection	IP20	
Relative humidity	≤ 93%	
Operating altitude	≤ 2,500m	
Insulation resistance	Not less than 100 MΩ between terminals and conductive housing parts	
Dielectric strength	2kV AC for 1 min, leakage current below 2 mA, no breakdown or flashover	
Electromagnetic compatibility	Level 3: electrostatic discharge, RF fields, fast transients and surges	
Voltage input	3 × 220V/380V · 0.1V resolution · overvoltage 1.2× continuous, 2× for 10s	—
Current input	External current transformer	—
Temperature measurement	—	4 inputs · −20 to 120°C · ±1°C accuracy
COM1 and COM2 communication	RS485 · Modbus-RTU · 9600 or 19200 bps · to monitoring system, touch screen or other device	

> For module operating and storage temperatures, contact ElectriDistro.

7 · Catalog numbers

Straight length and BEND catalog numbers

Each part is identified by a field-based catalog number.

7.1 Straight length

PRS	02	42	52	-	0.5
Series	Current	IP rating	Conductors		Length (m)

Examples · PRS024252-3 · PRS064252-1.5

Data Pro length, 250A, IP42, 3 phases + 5 wires, 3m long.
Data Pro length, 630A, IP42, 3 phases + 5 wires, 1.5m long.

7.2 BEND

PRS	LL	02	42	52	-	X0.5Y0.25	A90
Series	Type	Current	IP rating	Conductors		Legs (m)	Angle

Examples · PRSLL064252-X0.25Y0.25A90 · PRSLL044252-X0.5Y0.25A135

Left horizontal BEND, 630A, 0.25m legs, 90°.
Left horizontal BEND, 400A, 0.5m and 0.25m legs, 135°.

Rated current

Code	Current
02	250A
04	400A
05	500A
06	630A
08	800A
10	1,000A

Degree of protection

Code	Rating
42	IP42

Conductors

Code	System
52	3 phases + 5 wires

BEND type

Code	Type
LL	Left horizontal BEND

Length (m)

Code	Length
0.2	0.2m, minimum for feed
3	3m
...	in 0.01m steps

BEND legs X, Y (m)

Code	Length
X0.25 · Y0.25	0.25m minimum
...	in 0.01m steps

BEND angle

Code	Angle
A90	90°
A135	135°
...	in 1° steps

7 · Catalog numbers

Feeder and tap-off catalog numbers

7.3 Feeder box or flange end

PRS	FE	C	02	42	52	8	S	-	0.2
Series	Feeder	Type	Current	IP rating	Conductors	Module	Display		Length (m)

Examples · PRSFEC0242528S-0.5 · PRSFEB0642520N-1.3

Box-type feeder, 250A, with smart module and display, 0.5m.
In-line switchboard flange end, 630A, no module, no display, 1.3m.

7.4 Tap-off unit

PRS	PR	V	06	42	31	8
Series	Tap-off	Mounting	Current	IP rating	Outputs, poles	Module

Example · PRSPRH1242330

Tap-off unit, 125A, IP42, 3 outputs with 3-pole breaker, no smart module.

Unit current

Code	Current
01	16A
03	32A
04	40A
05	50A
06	63A
08	80A
10	100A
12	125A

Feeder current

Code	Current
02	250A
04	400A
05	500A
06	630A
08	800A
10	1,000A

Outputs and poles

Code	Configuration
11	1 output · 1-pole breaker
31	3 outputs · 1-pole breaker
33	3 outputs · 3-pole breaker
61	6 outputs · 1-pole breaker
63	6 outputs · 3-pole breaker

Unit mounting

Code	Mounting
H	Horizontal
V	Vertical

Smart module

Code	Module
8	With GB/T 7251.8 module
0	No module

Feeder type

Code	Type
C	Box type
B	In-line switchboard flange end

Display

Code	Display
S	With display
N	No display

Connector length (m)

Code	Length
0.16	0.16m, minimum
1.3	1.3m
...	in 0.01m steps

> Degree of protection: 42 = IP42. Conductors: 52 = 3 phases + 5 wires.

ElectriDistro

8 · Quote your project

From drawings to estimate in minutes

Our AI system reads your bill of materials
and sends you a reference estimate. An engineer reviews it.

Upload your project at electridistro.com
Excel, PDF or image of your bill of materials

Get a quote →

How it works

1. **Upload your document**
   Bill of materials, drawings or specification.
2. **AI reads it**
   Identifies straight lengths, BENDs, boxes and ratings.
3. **Get your estimate**
   A reference PDF arrives in your inbox right away.
4. **Engineering review**
   Our team reviews it within 48 h max.; if anything is off, we send the correction.

COMMERCIAL PARTNERS

Do you install or specify busway?

Join as a Commercial Partner. Registration required, no exclusivity.

- **Unit pricing** for your own quotes
- **Customer referrals** in your region
- **Project pricing** quoted per project
- **Technical support** live

Register →
electridistro.com/integrator

- **electridistro.com** Product catalog and contact
- **Accepted formats** Excel, CSV, PDF, PNG or JPG
- **Engineering review** 48 h max.; fixes if needed

WETOWN Manufacturer → ElectriDistro Exclusive distributor → B&B ELECTRIC Ecuador, Colombia, Peru — Authorized distribution channels

Technical data in this manual may change without notice.
Confirm values with ElectriDistro when ordering. © ElectriDistro LLC. ElectriDistro™